Goodman®
Air Conditioning & Heating

GSC13

Split System Air Conditioner
13 SEER / R-22

1½ to 5 Tons

Contents

Nomenclature 2
Product Specifications 3
Expanded Cooling Data 4
AHRI Ratings 18
Wiring Diagram 19
Dimensions 20
Accessories 20

Standard Features

- Energy-efficient compressor
- Quiet condenser fan system
- Factory-installed liquid-line filter drier
- Copper tube/aluminum fin coil
- For use with R-22 refrigerant; charged with inert gas for shipping
- R-22 piston kit included
- Brass liquid and suction service valves with sweat connections
- Contactor with lug connections
- Ground lug connection
- ETL Listed

Cabinet Features

- Louver design sound control top
- Steel louver coil guard
- Heavy-gauge galvanized-steel cabinet
- Attractive Architectural Gray powder-paint finish with 500-hour salt-spray approval
- When properly anchored, meets the 2010 Florida Building Code unit integrity requirements for hurricane-type winds (Anchor bracket kits available.)

5 YEAR PARTS LIMITED WARRANTY*

Intertek

* Complete warranty details available from your local dealer or at www.goodmanmfg.com.

G	S	C	13	036	1	A	A
1	2	3	4,5	6,7,8	9	10	11

Brand

G Goodman® (Standard Feature Set Models)

Product Category

S Split System

Unit Type

C Condenser R-22

H Heat Pump R-22

Efficiency

13 13 SEER

Nominal Capacity

018	1½ Tons	042	3½ Tons
024	2 Tons	048	4 Tons
030	2½ Tons	060	5 Tons
036	3 Tons		

Electrical

1 208/230 V, 1 Phase, 60 Hz

Engineering *

Major Revision

Engineering *

Minor Revision

* Neither used for order entry or inventory management.

	GSC13 0181G*	GSC13 0241F*	GSC13 0301E*	GSC13 0361G*	GSC13 0421C*	GSC13 0481C*	GSC13 0601D*
COOLING CAPACITIES							
Tonnage	1½	2	2½	3	3½	4	5
Decibels	76	76	72	75	76	76	77
COMPRESSOR							
RLA	6.8	10.8	13.5	13.4	15.4	19.2	21.8
LRA	40	56	68	74	87	112	137
CONDENSER FAN MOTOR							
Horsepower	1/8	1/8	1/8	1/6	¼	¼	¼
FLA	0.65	0.65	0.7	1.1	1.5	1.5	1.5
REFRIGERATION SYSTEM							
Refrigerant Line Size							
Liquid Line Size (“O.D.)	⅜"	⅜"	⅜"	⅜"	⅜"	⅜"	⅜"
Suction Line Size (“O.D.)	¾"	¾"	¾"	⅞"	1⅛"	1⅛"	1⅛"
Refrigerant Connection Size							
Liquid Valve Size (“O.D.)	⅜"	⅜"	⅜"	⅜"	⅜"	⅜"	⅜"
Suction Valve Size (“O.D.) [3]	¾"	¾"	¾"	¾" [3]	¾" [3]	⅞" 4	⅞" 4
Valve Type	Sweat	Sweat	Sweat	Sweat	Sweat	Sweat	Sweat
Refrigerant Charge	87	77	66	77	108	128	118
ELECTRICAL DATA							
AC Volts-Hz	208/230-60	208/230-60	208/230-60	208/230-60	208/230-60	208/230-60	208/230-60
Min. Circuit Ampacity[1]	9.2	14.2	17.6	17.9	20.8	25.5	28.8
Max. Overcurrent Device[2]	15	25	30	30	35	40	50
Min / Max Volts	197/253	197/253	197/253	197/253	197/253	197/253	197/253
Electrical Conduit Size	½" or ¾"	½" or ¾"	½" or ¾"	½" or ¾"	½" or ¾"	½" or ¾"	½" or ¾"
EQUIPMENT WEIGHT (LBS)	104	107	120	158	158	159	174
SHIP WEIGHT (LBS)	121	122	137	176	176	177	192

[1] Wire size should be determined in accordance with National Electrical Codes; extensive wire runs will require larger wire sizes

[2] Must use time-delay fuses or HACR-type circuit breakers of the same size as noted.

[3] Installer will need to supply ¾” to ⅞” adapters for suction line connections.

[4] Installer will need to supply ⅞” to 1⅛” adapters for suction line connections.

NOTES

- Always check the S&R plate for electrical data on the unit being installed.
- Charge with refrigerant charge listed on S&R plate; 15’ of ⅜” line included in this charge. System charge must be adjusted per Installation Instructions Final Charge Procedure.

			Outdoor Ambient Temperature																							
			65				75				85				95				105				115			
			Entering Indoor Wet Bulb Temperature																							
IDB	Airflow		59	63	67	71	59	63	67	71	59	63	67	71	59	63	67	71	59	63	67	71	59	63	67	71
70	525	MBh	15.8	16.4	17.9	-	15.4	16.0	17.5	-	15.1	15.6	17.1	-	14.7	15.2	16.7	-	14.0	14.5	15.9	-	12.9	13.4	14.7	-
		S/T	0.69	0.58	0.40	-	0.72	0.60	0.42	-	0.74	0.61	0.43	-	0.76	0.63	0.44	-	0.79	0.66	0.46	-	0.80	0.66	0.46	-
		ΔT	19	17	13	-	19	17	13	-	19	17	13	-	20	17	13	-	19	17	13	-	18	16	12	-
		kW	1.01	1.03	1.07	-	1.10	1.12	1.16	-	1.17	1.20	1.25	-	1.24	1.27	1.32	-	1.30	1.33	1.38	-	1.35	1.38	1.43	-
		Amps	4.2	4.3	4.5	-	4.6	4.7	4.8	-	4.9	5.0	5.2	-	5.2	5.4	5.5	-	5.5	5.7	5.9	-	5.9	6.0	6.2	-
		HI PR	130	140	148	-	146	157	166	-	166	179	189	-	189	203	215	-	213	229	242	-	235	253	267	-
		LO PR	59	63	68	-	62	66	72	-	65	69	75	-	68	72	79	-	71	76	83	-	74	78	86	-
	600	MBh	17.1	17.7	19.4	-	16.7	17.3	19.0	-	16.3	16.9	18.5	-	15.9	16.5	18.1	-	15.1	15.7	17.2	-	14.0	14.5	15.9	-
		S/T	0.72	0.60	0.42	-	0.74	0.62	0.43	-	0.76	0.64	0.44	-	0.79	0.66	0.46	-	0.82	0.68	0.47	-	0.82	0.69	0.48	-
		ΔT	19	16	12	-	19	17	13	-	19	17	13	-	19	17	13	-	19	16	12	-	18	15	12	-
		kW	1.04	1.06	1.10	-	1.13	1.15	1.20	-	1.21	1.24	1.28	-	1.28	1.31	1.36	-	1.34	1.37	1.42	-	1.39	1.42	1.47	-
		Amps	4.3	4.4	4.6	-	4.7	4.8	4.9	-	5.0	5.2	5.3	-	5.4	5.5	5.7	-	5.7	5.8	6.0	-	6.0	6.2	6.4	-
		HI PR	134	144	152	-	150	162	171	-	171	184	194	-	195	210	221	-	219	236	249	-	242	261	275	-
		LO PR	61	65	71	-	64	68	75	-	67	71	77	-	70	75	81	-	73	78	85	-	76	81	88	-
	675	MBh	17.6	18.3	20.0	-	17.2	17.9	19.6	-	16.8	17.4	19.1	-	16.4	17.0	18.6	-	15.6	16.2	17.7	-	14.4	15.0	16.4	-
		S/T	0.75	0.63	0.44	-	0.78	0.65	0.45	-	0.80	0.67	0.46	-	0.83	0.69	0.48	-	0.86	0.72	0.50	-	0.86	0.72	0.50	-
		ΔT	18	16	12	-	18	16	12	-	18	16	12	-	18	16	12	-	18	16	12	-	17	15	11	-
		kW	1.05	1.07	1.11	-	1.14	1.17	1.21	-	1.22	1.25	1.29	-	1.29	1.32	1.37	-	1.35	1.38	1.43	-	1.40	1.44	1.49	-
		Amps	4.4	4.5	4.6	-	4.7	4.8	5.0	-	5.1	5.2	5.4	-	5.4	5.5	5.7	-	5.7	5.9	6.1	-	6.1	6.2	6.4	-
		HI PR	135	146	154	-	152	164	173	-	173	186	196	-	197	212	224	-	221	238	252	-	245	263	278	-
		LO PR	61	65	71	-	65	69	75	-	67	72	78	-	71	75	82	-	74	79	86	-	77	82	89	-
75	525	MBh	16.1	16.5	17.9	19.2	15.7	16.2	17.5	18.8	15.3	15.8	17.1	18.3	15.0	15.4	16.7	17.9	14.2	14.6	15.8	17.0	13.2	13.5	14.7	15.7
		S/T	0.79	0.70	0.53	0.34	0.82	0.73	0.55	0.36	0.84	0.75	0.57	0.36	0.86	0.77	0.58	0.38	0.90	0.80	0.61	0.39	0.90	0.81	0.61	0.39
		ΔT	22	20	17	12	22	21	17	12	22	21	17	12	23	21	17	12	22	21	17	12	21	19	16	11
		kW	1.02	1.04	1.08	1.12	1.11	1.13	1.17	1.22	1.19	1.21	1.26	1.30	1.25	1.28	1.33	1.38	1.31	1.34	1.39	1.44	1.36	1.40	1.45	1.50
		Amps	4.3	4.4	4.5	4.7	4.6	4.7	4.8	5.0	5.0	5.1	5.2	5.4	5.3	5.4	5.6	5.8	5.6	5.7	5.9	6.1	5.9	6.0	6.2	6.5
		HI PR	131	141	149	156	147	159	168	175	168	180	191	199	191	206	217	226	215	231	244	255	237	255	270	281
		LO PR	59	63	69	74	63	67	73	78	65	70	76	81	69	73	80	85	72	77	84	89	74	79	86	92
	600	MBh	17.4	17.9	19.4	20.8	17.0	17.5	19.0	20.3	16.6	17.1	18.5	19.9	16.2	**16.7**	18.1	19.4	15.4	15.8	17.2	18.4	14.3	14.7	15.9	17.1
		S/T	0.82	0.73	0.55	0.36	0.85	0.76	0.57	0.37	0.87	0.78	0.59	0.38	0.90	**0.80**	0.61	0.39	0.93	0.83	0.63	0.40	0.94	0.84	0.63	0.41
		ΔT	22	20	16	11	22	20	17	11	22	20	17	12	22	**20**	17	12	22	20	17	11	20	19	15	11
		kW	1.05	1.07	1.11	1.15	1.14	1.17	1.21	1.25	1.22	1.25	1.29	1.34	1.29	**1.32**	1.37	1.42	1.35	1.38	1.43	1.49	1.40	1.44	1.49	1.54
		Amps	4.4	4.5	4.6	4.8	4.7	4.8	5.0	5.1	5.1	5.2	5.4	5.6	5.4	**5.5**	5.7	5.9	5.7	5.9	6.1	6.3	6.1	6.2	6.4	6.6
		HI PR	135	146	154	161	152	164	173	180	173	186	196	205	197	**212**	224	233	222	238	252	263	245	263	278	290
		LO PR	61	65	71	76	65	69	75	80	67	72	78	83	71	**75**	82	88	74	79	86	92	77	82	89	95
	675	MBh	17.9	18.5	20.0	21.5	17.5	18.0	19.5	21.0	17.1	17.6	19.1	20.5	16.7	17.2	18.6	20.0	15.9	16.3	17.7	19.0	14.7	15.1	16.4	17.6
		S/T	0.86	0.77	0.58	0.37	0.89	0.79	0.60	0.39	0.91	0.81	0.62	0.40	0.94	0.84	0.64	0.41	0.97	0.87	0.66	0.42	0.98	0.88	0.67	0.43
		ΔT	21	19	16	11	21	20	16	11	21	20	16	11	21	20	16	11	21	19	16	11	20	18	15	10
		kW	1.06	1.08	1.12	1.16	1.15	1.18	1.22	1.26	1.23	1.26	1.30	1.35	1.30	1.33	1.38	1.43	1.36	1.39	1.45	1.50	1.41	1.45	1.50	1.56
		Amps	4.4	4.5	4.7	4.8	4.8	4.9	5.0	5.2	5.1	5.3	5.4	5.6	5.5	5.6	5.8	6.0	5.8	5.9	6.1	6.3	6.1	6.3	6.5	6.7
		HI PR	137	147	155	162	154	165	174	182	175	188	198	207	199	214	226	236	224	241	254	265	247	266	281	293
		LO PR	62	66	72	77	65	70	76	81	68	72	79	84	71	76	83	88	75	80	87	93	77	82	90	96

IDB: Entering Indoor Dry Bulb Temperature
High and low pressures are measured at the liquid and suction service valves.
Shaded area reflects ACCA (TVA) conditions
kW = Total system power
Amps = outdoor unit amps (comp.+fan)
Design Subcooling 9 ±3 °F @ the liquid service valve, ARI 95 test conditions

Expanded Cooling Data — GSC130181G* (cont.)

			Outdoor Ambient Temperature																							
			65				75				85				95				105				115			
			Entering Indoor Wet Bulb Temperature																							
IDB	Airflow		59	63	67	71	59	63	67	71	59	63	67	71	59	63	67	71	59	63	67	71	59	63	67	71
80	525	MBh	16.4	16.7	17.9	19.1	16.0	16.3	17.4	18.6	15.6	15.9	17.0	18.2	15.2	15.6	16.6	17.8	14.5	14.8	15.8	16.9	13.4	13.7	14.6	15.6
		S/T	0.86	0.81	0.66	0.5	0.90	0.84	0.68	0.51	0.92	0.86	0.70	0.5	0.95	0.89	0.72	0.54	0.98	0.92	0.75	0.6	0.99	0.93	0.76	0.57
		ΔT	25	24	21	16	25	24	21	17	25	24	21	17	25	24	21	17	25	24	21	17	23	22	19	15
		kW	1.03	1.05	1.09	1.1	1.12	1.14	1.19	1.23	1.20	1.22	1.27	1.3	1.27	1.30	1.34	1.39	1.32	1.36	1.41	1.5	1.37	1.41	1.46	1.51
		Amps	4.3	4.4	4.5	4.7	4.6	4.7	4.9	5.1	5.0	5.1	5.3	5.5	5.3	5.4	5.6	5.8	5.6	5.8	6.0	6.2	6.0	6.1	6.3	6.5
		HI PR	133	143	151	157.3	149	160	169	177	169	182	192	200.8	193	208	219	229	217	234	247	257.2	240	258	272	284
		LO PR	60	64	70	74.3	63	68	74	79	66	70	77	81.6	69	74	81	86	73	77	84	89.9	75	80	87	93
	600	MBh	17.7	18.1	19.4	20.7	17.3	17.7	18.9	20.2	16.9	17.3	18.5	19.7	16.5	16.8	**18.0**	19.2	15.7	16.0	17.1	18.3	14.5	14.8	15.8	16.9
		S/T	0.90	0.84	0.68	0.5	0.93	0.87	0.71	0.53	0.95	0.89	0.73	0.5	0.98	0.92	**0.75**	0.56	1.00	0.96	0.78	0.6	1.00	0.96	0.78	0.59
		ΔT	24	23	20	16	25	24	21	16	25	24	21	16	25	24	**21**	17	24	23	20	16	22	22	19	15
		kW	1.06	1.08	1.12	1.2	1.15	1.18	1.22	1.26	1.23	1.26	1.30	1.4	1.30	1.33	**1.38**	1.43	1.36	1.40	1.45	1.5	1.41	1.45	1.50	1.56
		Amps	4.4	4.5	4.7	4.8	4.8	4.9	5.0	5.2	5.1	5.3	5.4	5.6	5.5	5.6	**5.8**	6.0	5.8	5.9	6.1	6.3	6.1	6.3	6.5	6.7
		HI PR	137	147	155	162.2	154	165	174	182	175	188	198	207.0	199	214	**226**	236	224	241	254	265.2	247	266	281	293
		LO PR	62	66	72	76.6	65	70	76	81	68	72	79	84.2	71	76	**83**	88	75	80	87	92.6	77	82	90	96
	675	MBh	18.3	18.7	19.9	21.3	17.8	18.2	19.5	20.8	17.4	17.8	19.0	20.3	17.0	17.4	18.5	19.8	16.1	16.5	17.6	18.8	14.9	15.3	16.3	17.4
		S/T	0.94	0.88	0.72	0.5	1.00	0.91	0.74	0.56	1.00	0.94	0.76	0.6	1.00	0.97	0.79	0.59	1.00	1.00	0.82	0.6	1.00	1.00	0.82	0.62
		ΔT	23	22	19	16	24	23	20	16	24	23	20	16	23	23	20	16	22	22	20	16	20	21	18	15
		kW	1.07	1.09	1.13	1.2	1.16	1.19	1.23	1.27	1.24	1.27	1.32	1.4	1.31	1.34	1.39	1.45	1.37	1.41	1.46	1.5	1.43	1.46	1.52	1.57
		Amps	4.5	4.6	4.7	4.9	4.8	4.9	5.1	5.2	5.2	5.3	5.5	5.7	5.5	5.6	5.8	6.0	5.8	6.0	6.2	6.4	6.2	6.3	6.5	6.8
		HI PR	138	149	157	163.8	155	167	176	184	176	190	200	209.0	201	216	228	238	226	243	257	267.8	250	269	284	296
		LO PR	63	67	73	77.4	66	70	77	82	69	73	80	85.0	72	77	84	89	76	80	88	93.6	78	83	91	97
85	525	MBh	16.6	17.0	17.8	19.0	16.3	16.6	17.4	18.5	15.9	16.2	16.9	18.1	15.5	15.8	16.5	17.6	14.7	15.0	15.7	16.8	13.6	13.9	14.5	15.5
		S/T	0.91	0.87	0.79	0.64	0.94	0.91	0.82	0.66	0.96	0.93	0.84	0.68	0.99	0.96	0.86	0.70	1.00	0.99	0.90	0.73	1.00	1.00	0.91	0.73
		ΔT	26	26	25	21	27	26	25	21	27	26	25	22	27	26	25	22	26	26	25	21	24	24	23	20
		kW	1.04	1.06	1.10	1.14	1.13	1.15	1.20	1.24	1.21	1.24	1.28	1.33	1.28	1.31	1.36	1.41	1.34	1.37	1.42	1.47	1.39	1.42	1.47	1.53
		Amps	4.3	4.4	4.6	4.7	4.7	4.8	4.9	5.1	5.0	5.2	5.3	5.5	5.4	5.5	5.7	5.9	5.7	5.8	6.0	6.2	6.0	6.2	6.4	6.6
		HI PR	134	144	152	159	150	162	171	178	171	184	194	203	195	210	221	231	219	236	249	260	242	261	275	287
		LO PR	61	65	71	75	64	68	74	79	67	71	77	82	70	74	81	87	73	78	85	91	76	81	88	94
	600	MBh	18.0	18.4	19.3	20.5	17.6	18.0	18.8	20.1	17.2	17.5	18.4	19.6	16.8	17.1	17.9	19.1	15.9	16.2	17.0	18.2	14.8	15.0	15.8	16.8
		S/T	0.94	0.91	0.82	0.66	0.97	0.94	0.85	0.69	1.00	0.96	0.87	0.71	1.00	0.99	0.90	0.73	1.00	1.00	0.93	0.76	1.00	1.00	0.94	0.76
		ΔT	26	26	24	21	26	26	24	21	26	26	24	21	26	26	25	21	24	25	24	21	23	23	23	20
		kW	1.07	1.09	1.13	1.17	1.16	1.19	1.23	1.27	1.24	1.27	1.32	1.36	1.31	1.34	1.39	1.45	1.37	1.41	1.46	1.51	1.43	1.46	1.52	1.57
		Amps	4.5	4.6	4.7	4.9	4.8	4.9	5.1	5.2	5.2	5.3	5.5	5.7	5.5	5.6	5.8	6.0	5.8	6.0	6.2	6.4	6.2	6.3	6.5	6.8
		HI PR	138	149	157	164	155	167	176	184	176	190	200	209	201	216	228	238	226	243	257	268	250	269	284	296
		LO PR	63	67	73	77	66	70	77	82	69	73	80	85	72	77	84	89	76	80	88	94	78	83	91	97
	675	MBh	18.6	18.9	19.8	21.2	18.1	18.5	19.4	20.7	17.7	18.1	18.9	20.2	17.3	17.6	18.4	19.7	16.4	16.7	17.5	18.7	15.2	15.5	16.2	17.3
		S/T	0.98	0.95	0.86	0.70	1.00	0.98	0.89	0.72	1.00	1.00	0.91	0.74	1.00	1.00	0.94	0.76	1.00	1.00	0.98	0.79	1.00	1.00	0.98	0.80
		ΔT	25	25	23	20	25	25	23	20	24	25	23	20	24	24	24	20	22	23	23	20	21	21	22	19
		kW	1.08	1.10	1.14	1.18	1.17	1.20	1.24	1.29	1.25	1.28	1.33	1.38	1.32	1.36	1.41	1.46	1.39	1.42	1.47	1.53	1.44	1.48	1.53	1.59
		Amps	4.5	4.6	4.7	4.9	4.8	4.9	5.1	5.3	5.2	5.3	5.5	5.7	5.6	5.7	5.9	6.1	5.9	6.0	6.2	6.5	6.2	6.4	6.6	6.8
		HI PR	140	150	159	165	157	169	178	186	178	192	202	211	203	218	231	240	228	246	259	271	252	271	287	299
		LO PR	63	67	73	78	67	71	78	83	69	74	81	86	73	78	85	90	76	81	89	94	79	84	92	98

IDB: Entering Indoor Dry Bulb Temperature
High and low pressures are measured at the liquid and suction service valves.
Shaded area reflects AHRI conditions
kW = Total system power
Amps = outdoor unit amps (comp.+fan)
Design Subcooling 9 ±3 °F @ the liquid service valve, ARI 95 test conditions

			Outdoor Ambient Temperature																							
			65				75				85				95				105				115			
			Entering Indoor Wet Bulb Temperature																							
IDB	Airflow		59	63	67	71	59	63	67	71	59	63	67	71	59	63	67	71	59	63	67	71	59	63	67	71
70	700	MBh	20.0	20.8	22.7	-	19.6	20.3	22.2	-	19.1	19.8	21.7	-	18.6	19.3	21.1	-	17.7	18.3	20.1	-	16.4	17.0	18.6	-
		S/T	0.67	0.56	0.38	-	0.69	0.58	0.40	-	0.71	0.59	0.41	-	0.73	0.61	0.42	-	0.76	0.63	0.44	-	0.76	0.64	0.44	-
		ΔT	17	15	11	-	18	15	12	-	18	15	12	-	18	15	12	-	18	15	12	-	16	14	11	-
		kW	1.48	1.52	1.57	-	1.61	1.65	1.71	-	1.73	1.77	1.83	-	1.83	1.87	1.94	-	1.91	1.96	2.03	-	1.99	2.04	2.11	-
		Amps	7.0	7.1	7.3	-	7.5	7.6	7.8	-	8.0	8.1	8.4	-	8.4	8.6	8.9	-	8.9	9.1	9.4	-	9.4	9.6	9.8	-
		HI PR	134	144	152	-	150	162	171	-	171	184	194	-	195	210	221	-	219	236	249	-	242	261	275	-
		LO PR	57	61	66	-	60	64	70	-	63	67	73	-	66	70	77	-	69	73	80	-	71	76	83	-
	800	MBh	21.7	22.5	24.6	-	21.2	22.0	24.1	-	20.7	21.4	23.5	-	20.2	20.9	22.9	-	19.2	19.9	21.8	-	17.8	18.4	20.2	-
		S/T	0.69	0.58	0.40	-	0.71	0.60	0.41	-	0.73	0.61	0.42	-	0.76	0.63	0.44	-	0.79	0.66	0.45	-	0.79	0.66	0.46	-
		ΔT	17	15	11	-	17	15	11	-	17	15	11	-	18	15	12	-	17	15	11	-	16	14	11	-
		kW	1.52	1.56	1.62	-	1.66	1.70	1.76	-	1.78	1.82	1.89	-	1.88	1.93	2.00	-	1.97	2.02	2.09	-	2.05	2.10	2.17	-
		Amps	7.2	7.3	7.5	-	7.6	7.8	8.0	-	8.2	8.3	8.6	-	8.6	8.8	9.1	-	9.1	9.3	9.6	-	9.6	9.8	10.1	-
		HI PR	138	149	157	-	155	167	176	-	176	190	200	-	201	216	228	-	226	243	257	-	250	269	284	-
		LO PR	59	63	68	-	62	66	72	-	65	69	75	-	68	72	79	-	71	76	83	-	74	78	86	-
	900	MBh	22.3	23.2	25.4	-	21.8	22.6	24.8	-	21.3	22.1	24.2	-	20.8	21.5	23.6	-	19.7	20.5	22.4	-	18.3	19.0	20.8	-
		S/T	0.72	0.60	0.42	-	0.75	0.63	0.43	-	0.77	0.64	0.44	-	0.79	0.66	0.46	-	0.82	0.69	0.48	-	0.83	0.69	0.48	-
		ΔT	17	14	11	-	17	14	11	-	17	14	11	-	17	15	11	-	17	14	11	-	16	13	10	-
		kW	1.54	1.58	1.63	-	1.67	1.71	1.78	-	1.79	1.84	1.90	-	1.90	1.95	2.02	-	1.99	2.04	2.11	-	2.07	2.12	2.19	-
		Amps	7.2	7.3	7.5	-	7.7	7.8	8.1	-	8.2	8.4	8.6	-	8.7	8.9	9.2	-	9.2	9.4	9.7	-	9.7	9.9	10.2	-
		HI PR	140	150	159	-	157	169	178	-	178	192	202	-	203	218	231	-	228	246	259	-	252	271	287	-
		LO PR	59	63	69	-	63	67	73	-	65	69	76	-	69	73	80	-	72	76	84	-	74	79	86	-
75	700	MBh	20.4	21.0	22.7	24.4	19.9	20.5	22.2	23.8	19.4	20.0	21.6	23.2	18.9	19.5	21.1	22.7	18.0	18.5	20.1	21.5	16.7	17.2	18.6	19.9
		S/T	0.76	0.68	0.51	0.33	0.78	0.70	0.53	0.34	0.80	0.72	0.54	0.35	0.83	0.74	0.56	0.36	0.86	0.77	0.58	0.37	0.87	0.78	0.59	0.38
		ΔT	20	19	15	11	20	19	15	11	20	19	15	11	21	19	16	11	20	19	15	11	19	17	14	10
		kW	1.50	1.53	1.59	1.65	1.63	1.67	1.73	1.79	1.74	1.79	1.85	1.92	1.85	1.89	1.96	2.03	1.93	1.98	2.05	2.13	2.01	2.06	2.13	2.21
		Amps	7.0	7.2	7.4	7.6	7.5	7.7	7.9	8.1	8.0	8.2	8.4	8.7	8.5	8.7	8.9	9.2	9.0	9.2	9.4	9.7	9.4	9.6	9.9	10.2
		HI PR	135	146	154	161	152	164	173	180	173	186	196	205	197	212	224	233	222	238	252	263	245	263	278	290
		LO PR	58	61	67	71	61	65	71	75	63	67	74	78	67	71	77	82	70	74	81	86	72	77	84	89
	800	MBh	22.1	22.7	24.6	26.4	21.5	22.2	24.0	25.8	21.0	21.7	23.4	25.2	20.5	**21.1**	22.9	24.5	19.5	20.1	21.7	23.3	18.1	18.6	20.1	21.6
		S/T	0.78	0.70	0.53	0.34	0.81	0.73	0.55	0.35	0.83	0.75	0.56	0.36	0.86	**0.77**	0.58	0.37	0.89	0.80	0.60	0.39	0.90	0.81	0.61	0.39
		ΔT	20	18	15	10	20	19	15	10	20	19	15	10	20	**19**	15	11	20	18	15	10	19	17	14	10
		kW	1.54	1.58	1.63	1.69	1.67	1.71	1.78	1.84	1.79	1.84	1.90	1.97	1.90	**1.95**	2.02	2.09	1.99	2.04	2.11	2.19	2.07	2.12	2.20	2.28
		Amps	7.2	7.3	7.5	7.8	7.7	7.8	8.1	8.3	8.2	8.4	8.6	8.9	8.7	**8.9**	9.2	9.5	9.2	9.4	9.7	10.0	9.7	9.9	10.2	10.5
		HI PR	140	150	159	166	157	169	178	186	178	192	203	211	203	**218**	231	241	228	246	260	271	252	272	287	299
		LO PR	59	63	69	74	63	67	73	78	65	69	76	81	69	**73**	80	85	72	77	84	89	74	79	86	92
	900	MBh	22.7	23.4	25.3	27.2	22.2	22.8	24.7	26.5	21.7	22.3	24.1	25.9	21.1	21.8	23.6	25.3	20.1	20.7	22.4	24.0	18.6	19.1	20.7	22.2
		S/T	0.82	0.74	0.56	0.36	0.85	0.76	0.58	0.37	0.87	0.78	0.59	0.38	0.90	0.81	0.61	0.39	0.94	0.84	0.63	0.41	0.94	0.84	0.64	0.41
		ΔT	19	18	14	10	19	18	15	10	19	18	15	10	19	18	15	10	19	18	14	10	18	17	14	9
		kW	1.55	1.59	1.65	1.71	1.69	1.73	1.79	1.86	1.81	1.85	1.92	1.99	1.92	1.96	2.04	2.11	2.01	2.06	2.13	2.21	2.09	2.14	2.22	2.30
		Amps	7.3	7.4	7.6	7.8	7.7	7.9	8.1	8.4	8.3	8.5	8.7	9.0	8.8	9.0	9.2	9.5	9.3	9.5	9.7	10.1	9.7	10.0	10.3	10.6
		HI PR	141	152	160	167	158	170	180	188	180	194	205	213	205	221	233	243	231	248	262	273	255	274	290	302
		LO PR	60	64	70	74	63	68	74	79	66	70	77	82	69	74	80	86	73	77	84	90	75	80	87	93

IDB: Entering Indoor Dry Bulb Temperature
High and low pressures are measured at the liquid and suction service valves.
Shaded area reflects ACCA (TVA) conditions
kW = Total system power
Amps = outdoor unit amps (comp.+fan)
Design Subcooling 9 ±3 °F @ the liquid service valve, ARI 95 test conditions

Expanded Cooling Data — GSC130241F* (cont.)

			Outdoor Ambient Temperature																							
			65				75				85				95				105				115			
			Entering Indoor Wet Bulb Temperature																							
IDB	Airflow		59	63	67	71	59	63	67	71	59	63	67	71	59	63	67	71	59	63	67	71	59	63	67	71
80	700	MBh	20.7	21.2	22.6	24.2	20.2	20.7	22.1	23.6	19.8	20.2	21.6	23.1	19.3	19.7	21.0	22.5	18.3	18.7	20.0	21.4	17.0	17.3	18.5	19.8
		S/T	0.83	0.78	0.63	0.5	0.86	0.81	0.66	0.49	0.88	0.83	0.67	0.5	0.91	0.85	0.69	0.52	0.94	0.89	0.72	0.5	0.95	0.89	0.73	0.54
		ΔT	23	22	19	15	23	22	19	15	23	22	19	15	23	22	19	15	23	22	19	15	21	20	18	14
		kW	1.51	1.55	1.60	1.7	1.64	1.68	1.74	1.81	1.76	1.80	1.87	1.9	1.86	1.91	1.98	2.05	1.95	2.00	2.07	2.2	2.03	2.08	2.15	2.23
		Amps	7.1	7.2	7.4	7.7	7.6	7.7	7.9	8.2	8.1	8.3	8.5	8.8	8.6	8.8	9.0	9.3	9.0	9.2	9.5	9.8	9.5	9.7	10.0	10.3
		HI PR	137	147	155	162.2	154	165	174	182	175	188	198	207.0	199	214	226	236	224	241	254	265.2	247	266	281	293
		LO PR	58	62	68	72.1	62	66	72	76	64	68	74	79.2	67	72	78	83	70	75	82	87.2	73	78	85	90
	800	MBh	22.5	22.9	24.5	26.2	21.9	22.4	23.9	25.6	21.4	21.9	23.4	25.0	20.9	21.3	**22.8**	24.4	19.8	20.3	21.7	23.2	18.4	18.8	20.1	21.4
		S/T	0.86	0.81	0.66	0.5	0.89	0.84	0.68	0.51	0.91	0.86	0.70	0.5	0.94	0.88	**0.72**	0.54	0.98	0.92	0.75	0.6	0.99	0.93	0.75	0.56
		ΔT	22	21	18	15	22	22	19	15	22	22	19	15	23	22	**19**	15	22	21	19	15	21	20	17	14
		kW	1.55	1.59	1.65	1.7	1.69	1.73	1.79	1.86	1.81	1.85	1.92	2.0	1.92	1.96	**2.04**	2.11	2.01	2.06	2.13	2.2	2.09	2.14	2.22	2.30
		Amps	7.3	7.4	7.6	7.8	7.7	7.9	8.1	8.4	8.3	8.5	8.7	9.0	8.8	9.0	**9.2**	9.5	9.3	9.5	9.7	10.1	9.7	10.0	10.3	10.6
		HI PR	141	152	160	167.2	158	170	180	188	180	194	205	213.4	205	221	**233**	243	231	248	262	273.4	255	274	290	302
		LO PR	60	64	70	74.3	63	68	74	79	66	70	77	81.6	69	74	**81**	86	73	77	84	89.8	75	80	87	93
	900	MBh	23.1	23.6	25.2	27.0	22.6	23.1	24.7	26.4	22.0	22.5	24.1	25.7	21.5	22.0	23.5	25.1	20.4	20.9	22.3	23.8	18.9	19.3	20.7	22.1
		S/T	0.90	0.85	0.69	0.5	0.93	0.88	0.71	0.53	0.96	0.90	0.73	0.5	1.00	0.93	0.75	0.56	1.00	0.96	0.78	0.6	1.00	0.97	0.79	0.59
		ΔT	21	20	18	14	22	21	18	14	22	21	18	14	22	21	18	14	21	21	18	14	19	19	17	13
		kW	1.57	1.60	1.66	1.7	1.70	1.75	1.81	1.88	1.83	1.87	1.94	2.0	1.93	1.98	2.05	2.13	2.03	2.08	2.15	2.2	2.10	2.16	2.24	2.32
		Amps	7.3	7.5	7.7	7.9	7.8	8.0	8.2	8.4	8.4	8.5	8.8	9.1	8.9	9.0	9.3	9.6	9.3	9.5	9.8	10.1	9.8	10.0	10.3	10.7
		HI PR	142	153	162	168.9	160	172	182	189	182	196	207	215.5	207	223	235	245	233	251	265	276.1	257	277	293	305
		LO PR	61	65	70	75.1	64	68	74	79	67	71	77	82.4	70	74	81	87	73	78	85	90.7	76	81	88	94
85	700	MBh	21.1	21.5	22.5	24.0	20.6	21.0	22.0	23.5	20.1	20.5	21.5	22.9	19.6	20.0	20.9	22.3	18.6	19.0	19.9	21.2	17.3	17.6	18.4	19.7
		S/T	0.87	0.84	0.76	0.61	0.90	0.87	0.78	0.64	0.92	0.89	0.80	0.65	0.95	0.92	0.83	0.67	0.99	0.95	0.86	0.70	1.00	0.96	0.87	0.71
		ΔT	24	24	22	19	24	24	23	20	24	24	23	20	25	24	23	20	24	24	23	19	23	22	21	18
		kW	1.52	1.56	1.62	1.68	1.66	1.70	1.76	1.82	1.78	1.82	1.89	1.96	1.88	1.93	2.00	2.07	1.97	2.02	2.09	2.17	2.05	2.10	2.17	2.26
		Amps	7.1	7.3	7.5	7.7	7.6	7.8	8.0	8.2	8.2	8.3	8.6	8.8	8.6	8.8	9.1	9.4	9.1	9.3	9.6	9.9	9.6	9.8	10.1	10.4
		HI PR	138	149	157	164	155	167	176	184	176	190	200	209	201	216	228	238	226	243	257	268	250	269	284	296
		LO PR	59	63	68	73	62	66	72	77	65	69	75	80	68	72	79	84	71	76	83	88	74	78	85	91
	800	MBh	22.8	23.3	24.4	26.0	22.3	22.7	23.8	25.4	21.8	22.2	23.3	24.8	21.2	21.7	22.7	24.2	20.2	20.6	21.6	23.0	18.7	19.1	20.0	21.3
		S/T	0.90	0.87	0.79	0.64	0.93	0.90	0.81	0.66	0.96	0.92	0.83	0.68	0.99	0.95	0.86	0.70	1.00	0.99	0.89	0.73	1.00	1.00	0.90	0.73
		ΔT	24	23	22	19	24	24	22	19	24	24	22	19	24	24	22	19	23	23	22	19	21	22	21	18
		kW	1.57	1.60	1.66	1.72	1.70	1.75	1.81	1.88	1.83	1.87	1.94	2.01	1.93	1.98	2.05	2.13	2.03	2.08	2.15	2.23	2.10	2.16	2.24	2.32
		Amps	7.3	7.5	7.7	7.9	7.8	8.0	8.2	8.4	8.4	8.5	8.8	9.1	8.9	9.0	9.3	9.6	9.3	9.5	9.8	10.1	9.8	10.0	10.3	10.7
		HI PR	142	153	162	169	160	172	182	189	182	196	207	216	207	223	235	245	233	251	265	276	257	277	293	305
		LO PR	61	65	70	75	64	68	74	79	67	71	77	82	70	74	81	87	73	78	85	91	76	81	88	94
	900	MBh	23.5	24.0	25.1	26.8	23.0	23.4	24.5	26.2	22.4	22.9	24.0	25.6	21.9	22.3	23.4	24.9	20.8	21.2	22.2	23.7	19.3	19.6	20.6	21.9
		S/T	0.95	0.91	0.82	0.67	0.98	0.95	0.85	0.69	1.00	0.97	0.87	0.71	1.00	1.00	0.90	0.73	1.00	1.00	0.94	0.76	1.00	1.00	0.94	0.77
		ΔT	23	22	21	18	23	23	21	19	23	23	21	19	22	23	22	19	21	22	21	18	20	20	20	17
		kW	1.58	1.62	1.68	1.74	1.72	1.76	1.83	1.89	1.84	1.89	1.96	2.03	1.95	2.00	2.07	2.15	2.04	2.10	2.17	2.25	2.12	2.18	2.26	2.34
		Amps	7.4	7.5	7.7	8.0	7.9	8.0	8.2	8.5	8.4	8.6	8.9	9.1	8.9	9.1	9.4	9.7	9.4	9.6	9.9	10.2	9.9	10.1	10.4	10.8
		HI PR	144	155	164	171	161	174	183	191	184	198	209	218	209	225	238	248	235	253	267	279	260	280	295	308
		LO PR	61	65	71	76	65	69	75	80	67	72	78	83	71	75	82	87	74	79	86	92	77	82	89	95

IDB: Entering Indoor Dry Bulb Temperature
High and low pressures are measured at the liquid and suction service valves.
Shaded area reflects AHRI conditions
kW = Total system power
Amps = outdoor unit amps (comp.+fan)
Design Subcooling 9 ±3 °F @ the liquid service valve, ARI 95 test conditions

			Outdoor Ambient Temperature																							
			65				75				85				95				105				115			
			Entering Indoor Wet Bulb Temperature																							
IDB	Airflow		59	63	67	71	59	63	67	71	59	63	67	71	59	63	67	71	59	63	67	71	59	63	67	71
70	831	MBh	25.1	26.0	28.5	-	24.5	25.4	27.9	-	23.9	24.8	27.2	-	23.4	24.2	26.5	-	22.2	23.0	25.2	-	20.6	21.3	23.3	-
		S/T	0.67	0.56	0.39	-	0.69	0.58	0.40	-	0.71	0.59	0.41	-	0.73	0.61	0.42	-	0.76	0.64	0.44	-	0.77	0.64	0.44	-
		ΔT	19	16	12	-	19	16	12	-	19	16	12	-	19	16	12	-	19	16	12	-	17	15	11	-
		kW	1.90	1.94	1.99	-	2.04	2.08	2.14	-	2.16	2.20	2.27	-	2.27	2.31	2.39	-	2.36	2.41	2.48	-	2.44	2.49	2.57	-
		Amps	7.0	7.1	7.4	-	7.5	7.7	7.9	-	8.1	8.3	8.5	-	8.6	8.8	9.1	-	9.1	9.3	9.6	-	9.6	9.9	10.2	-
		HI PR	147	158	167	-	165	178	188	-	188	202	213	-	214	230	243	-	240	259	273	-	266	286	302	-
		LO PR	58	61	67	-	61	65	71	-	63	67	74	-	67	71	77	-	70	74	81	-	72	77	84	-
	950	MBh	27.2	28.2	30.9	-	26.6	27.5	30.2	-	25.9	26.9	29.5	-	25.3	26.2	28.7	-	24.0	24.9	27.3	-	22.3	23.1	25.3	-
		S/T	0.69	0.58	0.40	-	0.72	0.60	0.42	-	0.74	0.61	0.43	-	0.76	0.63	0.44	-	0.79	0.66	0.46	-	0.80	0.66	0.46	-
		ΔT	18	16	12	-	18	16	12	-	18	16	12	-	19	16	12	-	18	16	12	-	17	15	11	-
		kW	1.94	1.98	2.04	-	2.08	2.13	2.19	-	2.21	2.26	2.33	-	2.32	2.37	2.44	-	2.41	2.47	2.55	-	2.50	2.55	2.63	-
		Amps	7.2	7.3	7.6	-	7.7	7.9	8.1	-	8.3	8.5	8.8	-	8.9	9.1	9.3	-	9.4	9.6	9.9	-	9.9	10.1	10.5	-
		HI PR	152	163	172	-	170	183	193	-	193	208	220	-	220	237	250	-	248	267	282	-	274	295	311	-
		LO PR	60	63	69	-	63	67	73	-	65	70	76	-	69	73	80	-	72	77	84	-	74	79	86	-
	1069	MBh	28.0	29.0	31.8	-	27.4	28.4	31.1	-	26.7	27.7	30.3	-	26.1	27.0	29.6	-	24.8	25.7	28.1	-	22.9	23.8	26.1	-
		S/T	0.73	0.61	0.42	-	0.75	0.63	0.44	-	0.77	0.64	0.45	-	0.80	0.67	0.46	-	0.83	0.69	0.48	-	0.83	0.70	0.48	-
		ΔT	18	15	12	-	18	15	12	-	18	15	12	-	18	15	12	-	18	15	12	-	16	14	11	-
		kW	1.96	2.00	2.06	-	2.10	2.14	2.21	-	2.23	2.27	2.34	-	2.34	2.39	2.46	-	2.43	2.49	2.57	-	2.52	2.57	2.65	-
		Amps	7.2	7.4	7.6	-	7.8	7.9	8.2	-	8.4	8.6	8.8	-	8.9	9.1	9.4	-	9.5	9.7	10.0	-	10.0	10.2	10.5	-
		HI PR	153	165	174	-	172	185	195	-	195	210	222	-	223	239	253	-	250	269	285	-	277	298	314	-
		LO PR	60	64	70	-	64	68	74	-	66	70	77	-	69	74	81	-	73	77	84	-	75	80	87	-
75	831	MBh	25.5	26.3	28.5	30.5	24.9	25.7	27.8	29.8	24.4	25.1	27.1	29.1	23.8	**24.5**	26.5	28.4	22.6	23.2	25.2	27.0	20.9	21.5	23.3	25.0
		S/T	0.76	0.68	0.51	0.33	0.79	0.70	0.53	0.34	0.81	0.72	0.55	0.35	0.83	**0.74**	0.56	0.36	0.86	0.77	0.59	0.38	0.87	0.78	0.59	0.38
		ΔT	21	20	16	11	22	20	16	11	22	20	16	11	22	**20**	17	11	22	20	16	11	20	19	15	10
		kW	1.91	1.95	2.01	2.07	2.05	2.09	2.16	2.23	2.17	2.22	2.29	2.36	2.28	**2.33**	2.41	2.48	2.38	2.43	2.50	2.58	2.46	2.51	2.59	2.67
		Amps	7.1	7.2	7.4	7.7	7.6	7.7	8.0	8.3	8.2	8.4	8.6	8.9	8.7	**8.9**	9.2	9.5	9.2	9.4	9.7	10.1	9.7	10.0	10.3	10.6
		HI PR	149	160	169	176	167	179	189	198	190	204	215	225	216	**232**	245	256	243	261	276	288	268	289	305	318
		LO PR	58	62	68	72	62	66	72	76	64	68	74	79	67	**72**	78	83	71	75	82	87	73	78	85	90
	950	MBh	27.7	28.5	30.8	33.1	27.0	27.8	30.1	32.3	26.4	27.2	29.4	31.6	25.7	**26.5**	28.7	30.8	24.5	25.2	27.3	29.2	22.7	23.3	25.2	27.1
		S/T	0.79	0.70	0.53	0.34	0.82	0.73	0.55	0.36	0.84	0.75	0.57	0.36	0.86	**0.77**	0.58	0.38	0.90	0.80	0.61	0.39	0.90	0.81	0.61	0.39
		ΔT	21	19	16	11	21	20	16	11	21	20	16	11	22	**20**	16	11	21	20	16	11	20	18	15	10
		kW	1.96	2.00	2.06	2.12	2.10	2.14	2.21	2.28	2.23	2.27	2.35	2.42	2.34	**2.39**	2.46	2.54	2.43	2.49	2.57	2.65	2.52	2.57	2.65	2.74
		Amps	7.2	7.4	7.6	7.9	7.8	7.9	8.2	8.5	8.4	8.6	8.8	9.2	8.9	**9.1**	9.4	9.8	9.5	9.7	10.0	10.3	10.0	10.2	10.6	10.9
		HI PR	153	165	174	182	172	185	195	204	195	210	222	232	223	**240**	253	264	250	269	285	297	277	298	314	328
		LO PR	60	64	70	74	64	68	74	79	66	70	77	82	69	**74**	81	86	73	77	84	90	75	80	87	93
	1069	MBh	28.5	29.3	31.8	34.1	27.8	28.7	31.0	33.3	27.2	28.0	30.3	32.5	26.5	**27.3**	29.5	31.7	25.2	25.9	28.1	30.1	23.3	24.0	26.0	27.9
		S/T	0.83	0.74	0.56	0.36	0.86	0.77	0.58	0.37	0.88	0.78	0.59	0.38	0.91	**0.81**	0.61	0.39	0.94	0.84	0.64	0.41	0.95	0.85	0.64	0.41
		ΔT	20	19	15	11	20	19	15	11	21	19	15	11	21	**19**	16	11	20	19	15	11	19	18	14	10
		kW	1.97	2.01	2.07	2.14	2.12	2.16	2.23	2.30	2.24	2.29	2.36	2.44	2.36	**2.41**	2.48	2.57	2.45	2.51	2.59	2.67	2.54	2.59	2.68	2.76
		Amps	7.3	7.5	7.7	7.9	7.8	8.0	8.3	8.5	8.5	8.7	8.9	9.2	9.0	**9.2**	9.5	9.8	9.5	9.8	10.1	10.4	10.1	10.3	10.6	11.0
		HI PR	155	166	176	183	174	187	197	206	197	212	224	234	225	**242**	255	266	253	272	287	300	279	301	318	331
		LO PR	61	65	71	75	64	68	75	79	67	71	77	83	70	**75**	81	87	73	78	85	91	76	81	88	94

IDB: Entering Indoor Dry Bulb Temperature
High and low pressures are measured at the liquid and suction service valves.
Shaded area reflects ACCA (TVA) conditions
kW = Total system power
Amps = outdoor unit amps (comp.+fan)
Design Subcooling 9 ±3 °F @ the liquid service valve, ARI 95 test conditions

Expanded Cooling Data — GSC130301** (cont.)

			Outdoor Ambient Temperature																							
			65				75				85				95				105				115			
			Entering Indoor Wet Bulb Temperature																							
IDB	Airflow		59	63	67	71	59	63	67	71	59	63	67	71	59	63	67	71	59	63	67	71	59	63	67	71
80	831	MBh	26.0	26.6	28.4	30.3	25.4	25.9	27.7	29.6	24.8	25.3	27.1	28.9	24.2	24.7	26.4	28.2	23.0	23.5	25.1	26.8	21.3	21.7	23.2	24.8
		S/T	0.83	0.78	0.64	0.5	0.86	0.81	0.66	0.49	0.88	0.83	0.68	0.5	0.91	0.86	0.70	0.52	0.95	0.89	0.72	0.5	0.96	0.90	0.73	0.55
		ΔT	24	23	20	16	24	23	20	16	24	23	20	16	24	23	20	16	24	23	20	16	22	22	19	15
		kW	1.93	1.97	2.02	2.1	2.07	2.11	2.17	2.24	2.19	2.24	2.31	2.4	2.30	2.35	2.42	2.50	2.39	2.45	2.52	2.6	2.48	2.53	2.61	2.70
		Amps	7.1	7.3	7.5	7.7	7.6	7.8	8.0	8.3	8.2	8.4	8.7	9.0	8.8	9.0	9.3	9.6	9.3	9.5	9.8	10.2	9.8	10.0	10.4	10.7
		HI PR	150	161	171	177.8	168	181	191	200	191	206	218	227.0	218	235	248	258	245	264	279	290.8	271	292	308	321
		LO PR	59	63	68	72.9	62	66	72	77	65	69	75	80.1	68	72	79	84	71	76	83	88.1	74	78	86	91
	950	MBh	28.2	28.8	30.7	32.9	27.5	28.1	30.0	32.1	26.9	27.4	29.3	31.3	26.2	26.8	**28.6**	30.6	24.9	25.4	27.2	29.0	23.1	23.6	25.2	26.9
		S/T	0.86	0.81	0.66	0.5	0.89	0.84	0.68	0.51	0.92	0.86	0.70	0.5	0.95	0.89	**0.72**	0.54	0.98	0.92	0.75	0.6	0.99	0.93	0.76	0.57
		ΔT	24	23	20	16	24	23	20	16	24	23	20	16	24	23	**20**	16	24	23	20	16	22	21	18	15
		kW	1.97	2.01	2.07	2.1	2.12	2.16	2.23	2.30	2.25	2.29	2.36	2.4	2.36	2.41	**2.49**	2.57	2.45	2.51	2.59	2.7	2.54	2.59	2.68	2.76
		Amps	7.3	7.5	7.7	7.9	7.8	8.0	8.3	8.5	8.5	8.7	8.9	9.2	9.0	9.2	**9.5**	9.8	9.5	9.8	10.1	10.4	10.1	10.3	10.6	11.0
		HI PR	155	166	176	183.3	174	187	197	206	197	212	224	234.0	225	242	**256**	266	253	272	287	299.8	279	301	318	331
		LO PR	61	65	71	75.2	64	68	75	79	67	71	77	82.5	70	75	**81**	87	73	78	85	90.9	76	81	88	94
	1069	MBh	29.0	29.6	31.7	33.9	28.3	29.0	30.9	33.1	27.7	28.3	30.2	32.3	27.0	27.6	29.5	31.5	25.6	26.2	28.0	29.9	23.7	24.3	25.9	27.7
		S/T	0.91	0.85	0.69	0.5	0.94	0.88	0.72	0.54	0.96	0.90	0.73	0.5	1.00	0.93	0.76	0.57	1.00	0.97	0.79	0.6	1.00	1.00	0.79	0.59
		ΔT	23	22	19	15	23	22	19	15	23	22	19	15	23	22	19	15	22	22	19	15	20	21	18	14
		kW	1.99	2.03	2.09	2.2	2.13	2.18	2.24	2.32	2.26	2.31	2.38	2.5	2.38	2.43	2.51	2.59	2.47	2.53	2.61	2.7	2.56	2.61	2.70	2.79
		Amps	7.4	7.5	7.7	8.0	7.9	8.1	8.3	8.6	8.5	8.7	9.0	9.3	9.1	9.3	9.6	9.9	9.6	9.9	10.2	10.5	10.2	10.4	10.7	11.1
		HI PR	156	168	178	185.2	175	189	199	208	199	215	227	236.3	227	244	258	269	255	275	290	302.8	282	304	321	335
		LO PR	61	65	71	75.9	65	69	75	80	67	72	78	83.4	71	75	82	88	74	79	86	91.8	77	82	89	95
85	831	MBh	26.4	27.0	28.2	30.1	25.8	26.3	27.6	29.4	25.2	25.7	26.9	28.7	24.6	25.1	26.3	28.0	23.4	23.8	25.0	26.6	21.7	22.1	23.1	24.7
		S/T	0.87	0.84	0.76	0.62	0.90	0.87	0.79	0.64	0.93	0.90	0.81	0.66	0.96	0.92	0.83	0.68	0.99	0.96	0.87	0.70	1.00	0.97	0.87	0.71
		ΔT	26	25	24	21	26	25	24	21	26	25	24	21	26	26	24	21	26	25	24	21	24	24	22	19
		kW	1.94	1.98	2.04	2.10	2.08	2.13	2.19	2.26	2.21	2.26	2.33	2.40	2.32	2.37	2.44	2.52	2.41	2.47	2.54	2.63	2.50	2.55	2.63	2.72
		Amps	7.2	7.3	7.5	7.8	7.7	7.9	8.1	8.4	8.3	8.5	8.8	9.1	8.8	9.1	9.3	9.7	9.4	9.6	9.9	10.3	9.9	10.1	10.5	10.8
		HI PR	152	163	172	180	170	183	193	202	193	208	220	229	220	237	250	261	248	267	282	294	274	295	311	325
		LO PR	60	63	69	74	63	67	73	78	65	70	76	81	69	73	80	85	72	77	84	89	74	79	86	92
	950	MBh	28.7	29.2	30.6	32.6	28.0	28.5	29.9	31.9	27.3	27.9	29.2	31.1	26.7	27.2	28.5	30.4	25.3	25.8	27.0	28.8	23.5	23.9	25.0	26.7
		S/T	0.91	0.87	0.79	0.64	0.94	0.91	0.82	0.66	0.96	0.93	0.84	0.68	0.99	0.96	0.86	0.70	1.00	0.99	0.90	0.73	1.00	1.00	0.90	0.73
		ΔT	25	25	23	20	25	25	24	20	25	25	24	20	26	25	24	21	25	25	23	20	23	23	22	19
		kW	1.99	2.03	2.09	2.15	2.13	2.18	2.24	2.32	2.26	2.31	2.38	2.46	2.38	2.43	2.51	2.59	2.47	2.53	2.61	2.69	2.56	2.61	2.70	2.79
		Amps	7.4	7.5	7.7	8.0	7.9	8.1	8.3	8.6	8.5	8.7	9.0	9.3	9.1	9.3	9.6	9.9	9.6	9.9	10.2	10.5	10.2	10.4	10.7	11.1
		HI PR	156	168	178	185	175	189	199	208	199	215	227	236	227	244	258	269	255	275	290	303	282	304	321	335
		LO PR	61	65	71	76	65	69	75	80	67	72	78	83	71	75	82	88	74	79	86	92	77	82	89	95
	1069	MBh	29.5	30.1	31.5	33.6	28.8	29.4	30.8	32.8	28.1	28.7	30.0	32.1	27.5	28.0	29.3	31.3	26.1	26.6	27.8	29.7	24.2	24.6	25.8	27.5
		S/T	0.95	0.92	0.83	0.67	0.98	0.95	0.86	0.69	1.00	0.97	0.88	0.71	1.00	1.00	0.91	0.74	1.00	1.00	0.94	0.76	1.00	1.00	0.95	0.77
		ΔT	24	24	22	19	24	24	23	20	24	24	23	20	24	24	23	20	22	23	23	20	21	21	21	18
		kW	2.00	2.04	2.10	2.17	2.15	2.19	2.26	2.33	2.28	2.33	2.40	2.48	2.40	2.45	2.53	2.61	2.49	2.55	2.63	2.72	2.58	2.64	2.72	2.81
		Amps	7.4	7.6	7.8	8.1	8.0	8.1	8.4	8.7	8.6	8.8	9.1	9.4	9.2	9.4	9.7	10.0	9.7	9.9	10.3	10.6	10.3	10.5	10.8	11.2
		HI PR	158	170	179	187	177	191	201	210	201	217	229	239	229	247	261	272	258	278	293	306	285	307	324	338
		LO PR	62	66	72	77	65	70	76	81	68	72	79	84	71	76	83	88	75	80	87	93	77	82	90	96

IDB: Entering Indoor Dry Bulb Temperature
High and low pressures are measured at the liquid and suction service valves.
Shaded area reflects AHRI conditions
kW = Total system power
Amps = outdoor unit amps (comp.+fan)
Design Subcooling 9 ±3 °F @ the liquid service valve, ARI 95 test conditions

			Outdoor Ambient Temperature																							
			65				75				85				95				105				115			
			Entering Indoor Wet Bulb Temperature																							
IDB	Airflow		59	63	67	71	59	63	67	71	59	63	67	71	59	63	67	71	59	63	67	71	59	63	67	71
70	963	MBh	30.0	31.1	34.1	-	29.3	30.4	33.3	-	28.6	29.7	32.5	-	27.9	29.0	31.7	-	26.5	27.5	30.1	-	24.6	25.5	27.9	-
		S/T	0.67	0.56	0.39	-	0.70	0.58	0.40	-	0.71	0.60	0.41	-	0.74	0.62	0.43	-	0.76	0.64	0.44	-	0.77	0.64	0.45	-
		ΔT	19	17	13	-	19	17	13	-	20	17	13	-	20	17	13	-	19	17	13	-	18	16	12	-
		kW	2.31	2.36	2.43	-	2.48	2.53	2.61	-	2.63	2.68	2.77	-	2.76	2.82	2.91	-	2.87	2.93	3.03	-	2.97	3.03	3.13	-
		Amps	8.8	9.0	9.3	-	9.5	9.7	10.0	-	10.3	10.5	10.8	-	10.9	11.2	11.6	-	11.6	11.9	12.3	-	12.3	12.6	13.0	-
		HI PR	141	152	160	-	158	170	180	-	180	194	205	-	205	221	233	-	231	248	262	-	255	274	290	-
		LO PR	59	62	68	-	62	66	72	-	64	69	75	-	68	72	79	-	71	75	82	-	73	78	85	-
	1100	MBh	32.5	33.7	36.9	-	31.8	32.9	36.1	-	31.0	32.2	35.2	-	30.3	31.4	34.4	-	28.8	29.8	32.7	-	26.6	27.6	30.2	-
		S/T	0.70	0.58	0.40	-	0.72	0.60	0.42	-	0.74	0.62	0.43	-	0.76	0.64	0.44	-	0.79	0.66	0.46	-	0.80	0.67	0.46	-
		ΔT	19	16	12	-	19	17	13	-	19	17	13	-	19	17	13	-	19	16	13	-	18	15	12	-
		kW	2.37	2.42	2.49	-	2.54	2.59	2.67	-	2.69	2.75	2.84	-	2.83	2.89	2.98	-	2.94	3.01	3.10	-	3.04	3.11	3.21	-
		Amps	9.0	9.2	9.5	-	9.7	10.0	10.3	-	10.5	10.8	11.1	-	11.2	11.5	11.9	-	11.9	12.2	12.6	-	12.6	12.9	13.4	-
		HI PR	146	157	165	-	163	176	186	-	186	200	211	-	212	228	240	-	238	256	270	-	263	283	299	-
		LO PR	60	64	70	-	64	68	74	-	66	71	77	-	70	74	81	-	73	78	85	-	76	80	88	-
	1238	MBh	33.5	34.7	38.1	-	32.7	33.9	37.2	-	32.0	33.1	36.3	-	31.2	32.3	35.4	-	29.6	30.7	33.6	-	27.4	28.4	31.2	-
		S/T	0.73	0.61	0.42	-	0.76	0.63	0.44	-	0.78	0.65	0.45	-	0.80	0.67	0.46	-	0.83	0.69	0.48	-	0.84	0.70	0.49	-
		ΔT	18	16	12	-	18	16	12	-	18	16	12	-	19	16	12	-	18	16	12	-	17	15	11	-
		kW	2.39	2.43	2.51	-	2.56	2.61	2.69	-	2.71	2.77	2.86	-	2.85	2.91	3.00	-	2.97	3.03	3.13	-	3.07	3.13	3.23	-
		Amps	9.1	9.3	9.6	-	9.8	10.1	10.4	-	10.6	10.9	11.2	-	11.3	11.6	12.0	-	12.1	12.3	12.7	-	12.7	13.1	13.5	-
		HI PR	147	158	167	-	165	178	187	-	188	202	213	-	214	230	243	-	240	259	273	-	266	286	302	-
		LO PR	61	65	71	-	65	69	75	-	67	71	78	-	70	75	82	-	74	79	86	-	76	81	89	-
75	963	MBh	30.5	31.4	34.0	36.5	29.8	30.7	33.2	35.7	29.1	30.0	32.5	34.8	28.4	**29.3**	31.7	34.0	27.0	27.8	30.1	32.3	25.0	25.7	27.9	29.9
		S/T	0.76	0.68	0.52	0.33	0.79	0.71	0.54	0.34	0.81	0.73	0.55	0.35	0.84	**0.75**	0.57	0.36	0.87	0.78	0.59	0.38	0.88	0.78	0.59	0.38
		ΔT	22	21	17	12	23	21	17	12	23	21	17	12	23	**21**	17	12	22	21	17	12	21	19	16	11
		kW	2.33	2.38	2.45	2.52	2.50	2.55	2.63	2.71	2.65	2.71	2.79	2.88	2.78	**2.84**	2.93	3.03	2.90	2.96	3.05	3.15	2.99	3.06	3.16	3.26
		Amps	8.9	9.1	9.4	9.7	9.6	9.8	10.1	10.5	10.4	10.6	10.9	11.3	11.0	**11.3**	11.7	12.1	11.7	12.0	12.4	12.9	12.4	12.7	13.1	13.6
		HI PR	143	153	162	169	160	172	182	190	182	196	207	216	207	**223**	236	246	233	251	265	276	258	277	293	305
		LO PR	59	63	69	73	63	67	73	77	65	69	76	81	68	**73**	79	85	72	76	83	89	74	79	86	92
	1100	MBh	33.1	34.1	36.9	39.6	32.3	33.3	36.0	38.7	31.5	32.5	35.2	37.7	30.8	**31.7**	34.3	36.8	29.2	30.1	32.6	35.0	27.1	27.9	30.2	32.4
		S/T	0.79	0.71	0.54	0.34	0.82	0.73	0.56	0.36	0.84	0.75	0.57	0.37	0.87	**0.78**	0.59	0.38	0.90	0.81	0.61	0.39	0.91	0.81	0.62	0.40
		ΔT	22	20	17	11	22	20	17	12	22	20	17	12	22	**21**	17	12	22	20	17	11	21	19	16	11
		kW	2.39	2.43	2.51	2.58	2.56	2.61	2.69	2.78	2.72	2.77	2.86	2.95	2.85	**2.91**	3.00	3.10	2.97	3.03	3.13	3.23	3.07	3.13	3.24	3.34
		Amps	9.1	9.3	9.6	10.0	9.8	10.1	10.4	10.7	10.6	10.9	11.2	11.6	11.3	**11.6**	12.0	12.4	12.1	12.3	12.7	13.2	12.7	13.1	13.5	14.0
		HI PR	147	158	167	174	165	178	187	196	188	202	213	222	214	**230**	243	253	240	259	273	285	266	286	302	315
		LO PR	61	65	71	76	65	69	75	80	67	71	78	83	70	**75**	82	87	74	79	86	91	76	81	89	95
	1238	MBh	34.1	35.1	38.0	40.8	33.3	34.3	37.1	39.8	32.5	33.5	36.2	38.9	31.7	**32.6**	35.3	37.9	30.1	31.0	33.6	36.0	27.9	28.7	31.1	33.4
		S/T	0.83	0.74	0.56	0.36	0.86	0.77	0.58	0.37	0.88	0.79	0.60	0.38	0.91	**0.81**	0.62	0.40	0.95	0.85	0.64	0.41	0.95	0.85	0.65	0.42
		ΔT	21	19	16	11	21	20	16	11	21	20	16	11	21	**20**	16	11	21	19	16	11	20	18	15	10
		kW	2.40	2.45	2.53	2.60	2.58	2.63	2.72	2.80	2.74	2.79	2.88	2.97	2.87	**2.94**	3.03	3.13	2.99	3.06	3.15	3.26	3.09	3.16	3.26	3.37
		Amps	9.2	9.4	9.7	10.0	9.9	10.1	10.5	10.8	10.7	11.0	11.3	11.8	11.4	**11.7**	12.1	12.5	12.2	12.5	12.9	13.3	12.9	13.2	13.6	14.1
		HI PR	148	160	169	176	167	179	189	197	190	204	215	225	216	**232**	245	256	243	261	276	288	268	289	305	318
		LO PR	62	66	72	76	65	69	76	81	68	72	79	84	71	**76**	83	88	75	79	87	92	77	82	90	95

IDB: Entering Indoor Dry Bulb Temperature
High and low pressures are measured at the liquid and suction service valves.
Shaded area reflects ACCA (TVA) conditions
kW = Total system power
Amps = outdoor unit amps (comp.+fan)
Design Subcooling 9 ±3 °F @ the liquid service valve, ARI 95 test conditions

Expanded Cooling Data — GSC130361G* (cont.)

			Outdoor Ambient Temperature																							
			65				75				85				95				105				115			
			Entering Indoor Wet Bulb Temperature																							
IDB	Airflow		59	63	67	71	59	63	67	71	59	63	67	71	59	63	67	71	59	63	67	71	59	63	67	71
80	963	MBh	31.1	31.8	33.9	36.3	30.4	31.0	33.1	35.4	29.6	30.3	32.4	34.6	28.9	29.5	31.6	33.7	27.5	28.1	30.0	32.1	25.4	26.0	27.8	29.7
		S/T	0.84	0.79	0.64	0.5	0.87	0.81	0.66	0.50	0.89	0.83	0.68	0.5	0.92	0.86	0.70	0.52	0.95	0.89	0.73	0.5	0.96	0.90	0.73	0.55
		ΔT	25	24	21	17	25	24	21	17	25	24	21	17	25	24	21	17	25	24	21	17	23	22	19	16
		kW	2.35	2.40	2.47	2.5	2.52	2.57	2.65	2.73	2.67	2.73	2.81	2.9	2.81	2.87	2.96	3.05	2.92	2.98	3.08	3.2	3.02	3.08	3.18	3.29
		Amps	9.0	9.2	9.5	9.8	9.7	9.9	10.2	10.6	10.5	10.7	11.0	11.4	11.1	11.4	11.8	12.2	11.8	12.1	12.5	13.0	12.5	12.8	13.2	13.7
		HI PR	144	155	164	170.7	162	174	184	192	184	198	209	217.9	209	225	238	248	236	253	268	279.2	260	280	296	308
		LO PR	60	64	70	74.1	63	67	73	78	66	70	76	81.3	69	73	80	85	72	77	84	89.5	75	80	87	93
	1100	MBh	33.7	34.4	36.8	39.3	32.9	33.6	35.9	38.4	32.1	32.8	35.1	37.5	31.3	32.0	**34.2**	36.6	29.8	30.4	32.5	34.7	27.6	28.2	30.1	32.2
		S/T	0.87	0.81	0.66	0.5	0.90	0.84	0.69	0.51	0.92	0.87	0.70	0.5	0.95	0.89	**0.73**	0.54	0.99	0.93	0.75	0.6	1.00	0.93	0.76	0.57
		ΔT	24	23	20	16	25	24	21	16	25	24	21	16	25	24	**21**	17	25	24	20	16	23	22	19	15
		kW	2.40	2.45	2.53	2.6	2.58	2.63	2.72	2.80	2.74	2.79	2.88	3.0	2.87	2.94	**3.03**	3.13	2.99	3.06	3.15	3.3	3.09	3.16	3.26	3.37
		Amps	9.2	9.4	9.7	10.1	9.9	10.1	10.5	10.8	10.7	11.0	11.3	11.8	11.4	11.7	**12.1**	12.5	12.2	12.5	12.9	13.3	12.9	13.2	13.6	14.1
		HI PR	149	160	169	176.0	167	179	189	198	190	204	215	224.6	216	232	**245**	256	243	261	276	287.8	268	289	305	318
		LO PR	62	66	72	76.4	65	69	76	81	68	72	79	83.8	71	76	**83**	88	75	79	87	92.3	77	82	90	95
	1238	MBh	34.7	35.4	37.9	40.5	33.9	34.6	37.0	39.5	33.1	33.8	36.1	38.6	32.3	33.0	35.2	37.7	30.7	31.3	33.5	35.8	28.4	29.0	31.0	33.1
		S/T	0.91	0.85	0.69	0.5	0.94	0.88	0.72	0.54	0.97	0.91	0.74	0.6	1.00	0.94	0.76	0.57	1.00	1.00	0.79	0.6	1.00	1.00	0.80	0.60
		ΔT	23	22	20	16	24	23	20	16	24	23	20	16	24	23	20	16	23	23	20	16	21	22	18	15
		kW	2.42	2.47	2.55	2.6	2.60	2.65	2.74	2.82	2.76	2.82	2.90	3.0	2.90	2.96	3.05	3.15	3.02	3.08	3.18	3.3	3.12	3.19	3.29	3.40
		Amps	9.3	9.5	9.8	10.1	10.0	10.2	10.6	10.9	10.8	11.1	11.4	11.9	11.6	11.8	12.2	12.7	12.3	12.6	13.0	13.5	13.0	13.3	13.7	14.2
		HI PR	150	161	170	177.8	168	181	191	199	191	206	218	226.9	218	235	248	258	245	264	279	290.7	271	292	308	321
		LO PR	62	66	72	77.1	66	70	77	81	68	73	80	84.7	72	77	84	89	75	80	88	93.2	78	83	91	96
85	963	MBh	31.6	32.2	33.8	36.0	30.9	31.5	33.0	35.2	30.2	30.7	32.2	34.3	29.4	30.0	31.4	33.5	27.9	28.5	29.8	31.8	25.9	26.4	27.6	29.5
		S/T	0.88	0.85	0.76	0.62	0.91	0.88	0.79	0.64	0.93	0.90	0.81	0.66	0.96	0.93	0.84	0.68	1.00	0.96	0.87	0.71	1.00	0.97	0.88	0.71
		ΔT	27	26	25	21	27	26	25	22	27	26	25	22	27	27	25	22	27	26	25	21	25	25	23	20
		kW	2.37	2.41	2.49	2.56	2.54	2.59	2.67	2.76	2.69	2.75	2.84	2.93	2.83	2.89	2.98	3.08	2.94	3.01	3.10	3.20	3.04	3.11	3.21	3.31
		Amps	9.0	9.2	9.5	9.9	9.7	10.0	10.3	10.6	10.5	10.8	11.1	11.5	11.2	11.5	11.9	12.3	11.9	12.2	12.6	13.1	12.6	12.9	13.4	13.9
		HI PR	145	157	165	172	163	176	186	194	186	200	211	220	211	228	240	251	238	256	270	282	263	283	299	312
		LO PR	60	64	70	75	64	68	74	79	66	71	77	82	70	74	81	86	73	78	85	90	76	80	88	94
	1100	MBh	34.3	34.9	36.6	39.0	33.5	34.1	35.7	38.1	32.7	33.3	34.9	37.2	31.9	32.5	34.0	36.3	30.3	30.9	32.3	34.5	28.0	28.6	29.9	31.9
		S/T	0.91	0.88	0.79	0.64	0.94	0.91	0.82	0.67	0.97	0.93	0.84	0.68	1.00	0.96	0.87	0.71	1.00	1.00	0.90	0.73	1.00	1.00	0.91	0.74
		ΔT	26	26	24	21	26	26	25	21	26	26	25	21	27	26	25	21	25	26	24	21	23	24	23	20
		kW	2.42	2.47	2.55	2.62	2.60	2.65	2.74	2.82	2.76	2.82	2.90	3.00	2.90	2.96	3.05	3.15	3.02	3.08	3.18	3.28	3.12	3.19	3.29	3.40
		Amps	9.3	9.5	9.8	10.1	10.0	10.2	10.6	10.9	10.8	11.1	11.4	11.9	11.6	11.8	12.2	12.7	12.3	12.6	13.0	13.5	13.0	13.3	13.7	14.2
		HI PR	150	161	170	178	168	181	191	199	191	206	218	227	218	235	248	258	245	264	279	291	271	292	308	321
		LO PR	62	66	72	77	66	70	77	81	68	73	80	85	72	77	84	89	75	80	88	93	78	83	91	96
	1238	MBh	35.3	36.0	37.7	40.2	34.5	35.1	36.8	39.3	33.7	34.3	35.9	38.3	32.8	33.5	35.0	37.4	31.2	31.8	33.3	35.5	28.9	29.5	30.8	32.9
		S/T	0.95	0.92	0.83	0.67	0.99	0.95	0.86	0.70	1.00	0.98	0.88	0.72	1.00	1.00	0.91	0.74	1.00	1.00	0.95	0.77	1.00	1.00	0.95	0.77
		ΔT	25	25	23	20	25	25	24	20	25	25	24	20	24	25	24	21	23	24	23	20	21	22	22	19
		kW	2.44	2.49	2.57	2.65	2.62	2.68	2.76	2.85	2.78	2.84	2.93	3.02	2.92	2.98	3.08	3.18	3.04	3.11	3.21	3.31	3.14	3.21	3.32	3.43
		Amps	9.4	9.6	9.9	10.2	10.1	10.3	10.6	11.0	10.9	11.2	11.5	12.0	11.7	11.9	12.3	12.8	12.4	12.7	13.1	13.6	13.1	13.4	13.9	14.4
		HI PR	151	163	172	180	170	183	193	201	193	208	220	229	220	237	250	261	248	267	282	294	274	295	311	324
		LO PR	63	67	73	78	67	71	77	82	69	74	80	86	73	77	84	90	76	81	88	94	79	84	91	97

IDB: Entering Indoor Dry Bulb Temperature
High and low pressures are measured at the liquid and suction service valves.
Shaded area reflects AHRI conditions
kW = Total system power
Amps = outdoor unit amps (comp.+fan)
Design Subcooling 9 ±3 °F @ the liquid service valve, ARI 95 test conditions

Expanded Cooling Data — GSC130421C*

			Outdoor Ambient Temperature																							
			65				75				85				95				105				115			
			Entering Indoor Wet Bulb Temperature																							
IDB	Airflow		59	63	67	71	59	63	67	71	59	63	67	71	59	63	67	71	59	63	67	71	59	63	67	71
70	1225	MBh	35.6	36.9	40.4	-	34.8	36.0	39.5	-	33.9	35.2	38.5	-	33.1	34.3	37.6	-	31.4	32.6	35.7	-	29.1	30.2	33.1	-
		S/T	0.69	0.58	0.40	-	0.72	0.60	0.41	-	0.73	0.61	0.42	-	0.76	0.63	0.44	-	0.79	0.66	0.45	-	0.79	0.66	0.46	-
		ΔT	18	16	12	-	19	16	12	-	19	16	12	-	19	16	12	-	19	16	12	-	17	15	11	-
		kW	2.12	2.17	2.25	-	2.31	2.37	2.46	-	2.48	2.54	2.64	-	2.63	2.70	2.80	-	2.76	2.83	2.93	-	2.87	2.94	3.05	-
		Amps	8.1	8.2	8.5	-	8.6	8.8	9.1	-	9.3	9.5	9.8	-	9.9	10.1	10.4	-	10.5	10.7	11.1	-	11.1	11.3	11.7	-
		HI PR	126	136	143	-	141	152	161	-	161	173	183	-	183	197	208	-	206	222	234	-	228	245	259	-
		LO PR	60	64	69	-	63	67	73	-	66	70	76	-	69	73	80	-	72	77	84	-	75	80	87	-
	1400	MBh	38.6	40.0	43.8	-	37.7	39.0	42.8	-	36.8	38.1	41.7	-	35.9	37.2	40.7	-	34.1	35.3	38.7	-	31.6	32.7	35.8	-
		S/T	0.72	0.60	0.41	-	0.74	0.62	0.43	-	0.76	0.64	0.44	-	0.78	0.66	0.45	-	0.81	0.68	0.47	-	0.82	0.69	0.48	-
		ΔT	18	16	12	-	18	16	12	-	18	16	12	-	18	16	12	-	18	16	12	-	17	15	11	-
		kW	2.18	2.23	2.32	-	2.38	2.44	2.53	-	2.55	2.62	2.71	-	2.71	2.78	2.88	-	2.84	2.91	3.02	-	2.95	3.03	3.14	-
		Amps	8.3	8.4	8.7	-	8.9	9.1	9.3	-	9.6	9.8	10.1	-	10.2	10.4	10.7	-	10.8	11.0	11.4	-	11.4	11.6	12.0	-
		HI PR	130	140	148	-	146	157	166	-	166	179	189	-	189	203	215	-	213	229	242	-	235	253	267	-
		LO PR	62	66	72	-	65	69	76	-	68	72	79	-	71	76	83	-	75	79	87	-	77	82	90	-
	1575	MBh	39.7	41.2	45.1	-	38.8	40.2	44.0	-	37.9	39.2	43.0	-	36.9	38.3	42.0	-	35.1	36.4	39.9	-	32.5	33.7	36.9	-
		S/T	0.75	0.63	0.43	-	0.78	0.65	0.45	-	0.80	0.67	0.46	-	0.82	0.69	0.48	-	0.85	0.71	0.49	-	0.86	0.72	0.50	-
		ΔT	17	15	11	-	18	15	12	-	18	15	12	-	18	15	12	-	18	15	11	-	16	14	11	-
		kW	2.20	2.26	2.34	-	2.40	2.46	2.55	-	2.58	2.64	2.74	-	2.73	2.80	2.91	-	2.86	2.94	3.05	-	2.98	3.05	3.17	-
		Amps	8.3	8.5	8.8	-	8.9	9.1	9.4	-	9.6	9.9	10.2	-	10.2	10.5	10.8	-	10.9	11.1	11.5	-	11.5	11.7	12.1	-
		HI PR	131	141	149	-	147	159	167	-	168	180	190	-	191	205	217	-	215	231	244	-	237	255	270	-
		LO PR	62	66	72	-	66	70	76	-	68	73	79	-	72	76	83	-	75	80	87	-	78	83	90	-
75	1225	MBh	36.2	37.3	40.3	43.3	35.3	36.4	39.4	42.3	34.5	35.5	38.5	41.3	33.7	**34.7**	37.5	40.3	32.0	32.9	35.6	38.3	29.6	30.5	33.0	35.4
		S/T	0.78	0.70	0.53	0.34	0.81	0.73	0.55	0.35	0.83	0.75	0.56	0.36	0.86	**0.77**	0.58	0.37	0.89	0.80	0.60	0.39	0.90	0.81	0.61	0.39
		ΔT	21	20	16	11	22	20	16	11	22	20	16	11	22	**20**	16	11	21	20	16	11	20	18	15	10
		kW	2.14	2.19	2.27	2.36	2.33	2.39	2.48	2.57	2.50	2.57	2.66	2.76	2.65	**2.72**	2.82	2.93	2.78	2.85	2.96	3.07	2.89	2.97	3.08	3.20
		Amps	8.1	8.3	8.5	8.8	8.7	8.9	9.2	9.5	9.4	9.6	9.9	10.2	10.0	**10.2**	10.5	10.9	10.6	10.8	11.2	11.6	11.2	11.4	11.8	12.2
		HI PR	127	137	145	151	143	154	162	169	163	175	185	193	185	**199**	210	219	208	224	237	247	230	248	262	273
		LO PR	60	64	70	75	64	68	74	79	66	71	77	82	70	**74**	81	86	73	78	85	90	76	80	88	93
	1400	MBh	39.2	40.4	43.7	46.9	38.3	39.4	42.7	45.8	37.4	38.5	41.7	44.7	36.5	**37.6**	40.6	43.6	34.6	35.7	38.6	41.4	32.1	33.0	35.8	38.4
		S/T	0.81	0.73	0.55	0.35	0.84	0.75	0.57	0.37	0.86	0.77	0.59	0.38	0.89	**0.80**	0.60	0.39	0.93	0.83	0.63	0.40	0.93	0.84	0.63	0.41
		ΔT	21	19	16	11	21	20	16	11	21	20	16	11	21	**20**	16	11	21	19	16	11	20	18	15	10
		kW	2.20	2.26	2.34	2.43	2.40	2.46	2.55	2.65	2.58	2.64	2.74	2.85	2.73	**2.80**	2.91	3.02	2.86	2.94	3.05	3.16	2.98	3.05	3.17	3.29
		Amps	8.3	8.5	8.8	9.1	8.9	9.1	9.4	9.7	9.6	9.9	10.2	10.5	10.3	**10.5**	10.8	11.2	10.9	11.1	11.5	11.9	11.5	11.7	12.1	12.5
		HI PR	131	141	149	156	147	159	167	175	168	180	190	199	191	**205**	217	226	215	231	244	255	237	255	270	281
		LO PR	62	66	72	77	66	70	76	81	68	73	79	85	72	**76**	83	89	75	80	87	93	78	83	90	96
	1575	MBh	40.4	41.6	45.0	48.3	39.4	40.6	44.0	47.2	38.5	39.6	42.9	46.1	37.6	**38.7**	41.9	44.9	35.7	36.7	39.8	42.7	33.1	34.0	36.8	39.5
		S/T	0.85	0.76	0.58	0.37	0.88	0.79	0.60	0.38	0.91	0.81	0.61	0.39	0.94	**0.84**	0.63	0.41	0.97	0.87	0.66	0.42	0.98	0.88	0.66	0.43
		ΔT	20	19	15	10	20	19	15	11	20	19	15	11	21	**19**	15	11	20	19	15	11	19	17	14	10
		kW	2.22	2.28	2.36	2.45	2.42	2.48	2.58	2.67	2.60	2.67	2.77	2.87	2.76	**2.83**	2.93	3.05	2.89	2.97	3.08	3.19	3.01	3.08	3.20	3.32
		Amps	8.4	8.6	8.8	9.1	9.0	9.2	9.5	9.8	9.7	9.9	10.2	10.6	10.3	**10.6**	10.9	11.3	11.0	11.2	11.6	12.0	11.6	11.8	12.2	12.6
		HI PR	133	143	151	157	149	160	169	176	169	182	192	201	193	**207**	219	228	217	233	246	257	240	258	272	284
		LO PR	63	67	73	78	66	71	77	82	69	74	80	85	73	**77**	84	90	76	81	88	94	79	84	91	97

IDB: Entering Indoor Dry Bulb Temperature
High and low pressures are measured at the liquid and suction service valves.
Shaded area reflects ACCA (TVA) conditions
kW = Total system power
Amps = outdoor unit amps (comp.+fan)
Design Subcooling 9 ±3 °F @ the liquid service valve, ARI 95 test conditions

Expanded Cooling Data — GSC130421C* (cont.)

			Outdoor Ambient Temperature																							
			65				75				85				95				105				115			
			Entering Indoor Wet Bulb Temperature																							
IDB	Airflow		59	63	67	71	59	63	67	71	59	63	67	71	59	63	67	71	59	63	67	71	59	63	67	71
80	1225	MBh	36.8	37.6	40.2	43.0	36.0	36.8	39.3	42.0	35.1	35.9	38.3	41.0	34.3	35.0	37.4	40.0	32.6	33.3	35.5	38.0	30.2	30.8	32.9	35.2
		S/T	0.86	0.81	0.66	0.5	0.89	0.84	0.68	0.51	0.91	0.86	0.70	0.5	0.94	0.88	0.72	0.54	0.98	0.92	0.75	0.6	0.99	0.93	0.75	0.56
		ΔT	24	23	20	16	24	23	20	16	24	23	20	16	24	23	20	16	24	23	20	16	22	21	19	15
		kW	2.16	2.21	2.30	2.4	2.36	2.41	2.50	2.60	2.53	2.59	2.69	2.8	2.68	2.75	2.85	2.96	2.81	2.88	2.99	3.1	2.92	3.00	3.11	3.23
		Amps	8.2	8.4	8.6	8.9	8.8	9.0	9.3	9.6	9.5	9.7	10.0	10.3	10.1	10.3	10.6	11.0	10.7	10.9	11.3	11.7	11.3	11.5	11.9	12.3
		HI PR	129	138	146	152.5	144	155	164	171	164	177	187	194.6	187	201	213	222	210	226	239	249.4	232	250	264	276
		LO PR	61	65	71	75.5	64	69	75	80	67	71	78	82.9	70	75	82	87	74	78	86	91.3	76	81	89	94
	1400	MBh	39.9	40.8	43.6	46.6	39.0	39.8	42.6	45.5	38.0	38.9	41.5	44.4	37.1	37.9	**40.5**	43.3	35.3	36.0	38.5	41.2	32.7	33.4	35.7	38.1
		S/T	0.89	0.84	0.68	0.5	0.92	0.87	0.71	0.53	0.95	0.89	0.72	0.5	0.98	0.92	**0.75**	0.56	1.00	0.95	0.78	0.6	1.00	0.96	0.78	0.58
		ΔT	23	22	19	16	24	23	20	16	24	23	20	16	24	23	**20**	16	23	23	20	16	21	21	18	15
		kW	2.22	2.28	2.36	2.5	2.42	2.48	2.58	2.67	2.60	2.67	2.77	2.9	2.76	2.83	**2.94**	3.05	2.89	2.97	3.08	3.2	3.01	3.08	3.20	3.32
		Amps	8.4	8.6	8.8	9.1	9.0	9.2	9.5	9.8	9.7	9.9	10.2	10.6	10.3	10.6	**10.9**	11.3	11.0	11.2	11.6	12.0	11.6	11.8	12.2	12.6
		HI PR	133	143	151	157.2	149	160	169	176	169	182	192	200.6	193	207	**219**	229	217	233	246	257.1	240	258	272	284
		LO PR	63	67	73	77.8	66	71	77	82	69	74	80	85.5	73	77	**84**	90	76	81	88	94.1	79	84	91	97
	1575	MBh	41.1	42.0	44.9	48.0	40.1	41.0	43.8	46.9	39.2	40.0	42.8	45.7	38.2	39.1	41.7	44.6	36.3	37.1	39.7	42.4	33.6	34.4	36.7	39.3
		S/T	0.94	0.88	0.71	0.5	0.97	0.91	0.74	0.55	1.00	0.93	0.76	0.6	1.00	0.96	0.78	0.59	1.00	1.00	0.81	0.6	1.00	1.00	0.82	0.61
		ΔT	22	22	19	15	23	22	19	15	23	22	19	15	22	22	19	15	21	22	19	15	20	20	18	14
		kW	2.24	2.30	2.38	2.5	2.45	2.51	2.60	2.70	2.63	2.69	2.79	2.9	2.79	2.86	2.96	3.08	2.92	2.99	3.11	3.2	3.04	3.11	3.23	3.35
		Amps	8.5	8.6	8.9	9.2	9.1	9.3	9.6	9.9	9.8	10.0	10.3	10.7	10.4	10.7	11.0	11.4	11.0	11.3	11.7	12.1	11.7	11.9	12.3	12.7
		HI PR	134	144	152	158.8	150	162	171	178	171	184	194	202.6	195	210	221	231	219	236	249	259.7	242	260	275	287
		LO PR	64	68	74	78.6	67	71	78	83	70	74	81	86.3	73	78	85	91	77	82	89	95.0	79	85	92	98
85	1225	MBh	37.5	38.2	40.0	42.7	36.6	37.3	39.1	41.7	35.7	36.4	38.1	40.7	34.9	35.5	37.2	39.7	33.1	33.8	35.4	37.7	30.7	31.3	32.8	34.9
		S/T	0.90	0.87	0.79	0.64	0.93	0.90	0.81	0.66	0.96	0.92	0.83	0.68	0.99	0.95	0.86	0.70	1.00	0.99	0.89	0.73	1.00	1.00	0.90	0.73
		ΔT	25	25	24	20	26	25	24	21	26	25	24	21	26	25	24	21	25	25	24	21	23	23	22	19
		kW	2.18	2.23	2.32	2.40	2.38	2.44	2.53	2.62	2.55	2.62	2.71	2.82	2.71	2.77	2.88	2.99	2.84	2.91	3.02	3.13	2.95	3.02	3.14	3.26
		Amps	8.3	8.4	8.7	9.0	8.9	9.1	9.3	9.6	9.6	9.8	10.1	10.4	10.2	10.4	10.7	11.1	10.8	11.0	11.4	11.8	11.4	11.6	12.0	12.4
		HI PR	130	140	148	154	146	157	166	173	166	178	188	197	189	203	215	224	213	229	241	252	235	253	267	278
		LO PR	62	66	72	76	65	69	76	81	68	72	79	84	71	76	83	88	75	79	87	92	77	82	90	95
	1400	MBh	40.6	41.4	43.3	46.2	39.7	40.4	42.3	45.2	38.7	39.5	41.3	44.1	37.8	38.5	40.3	43.0	35.9	36.6	38.3	40.9	33.2	33.9	35.5	37.9
		S/T	0.94	0.90	0.81	0.66	0.97	0.94	0.84	0.68	0.99	0.96	0.87	0.70	1.00	0.99	0.89	0.72	1.00	1.00	0.93	0.75	1.00	1.00	0.94	0.76
		ΔT	25	25	23	20	25	25	23	20	25	25	23	20	25	25	24	20	24	24	23	20	22	22	22	19
		kW	2.24	2.30	2.38	2.47	2.45	2.51	2.60	2.70	2.63	2.69	2.79	2.90	2.79	2.86	2.96	3.08	2.92	2.99	3.11	3.23	3.04	3.11	3.23	3.35
		Amps	8.5	8.6	8.9	9.2	9.1	9.3	9.6	9.9	9.8	10.0	10.3	10.7	10.4	10.7	11.0	11.4	11.0	11.3	11.7	12.1	11.7	11.9	12.3	12.7
		HI PR	134	144	152	159	150	162	171	178	171	184	194	203	195	210	221	231	219	236	249	260	242	260	275	287
		LO PR	64	68	74	79	67	71	78	83	70	74	81	86	73	78	85	91	77	82	89	95	79	85	92	98
	1575	MBh	41.8	42.6	44.6	47.6	40.8	41.6	43.6	46.5	39.9	40.6	42.6	45.4	38.9	39.7	41.5	44.3	37.0	37.7	39.5	42.1	34.2	34.9	36.5	39.0
		S/T	0.98	0.95	0.85	0.69	1.00	0.98	0.89	0.72	1.00	1.00	0.91	0.74	1.00	1.00	0.94	0.76	1.00	1.00	0.97	0.79	1.00	1.00	0.98	0.80
		ΔT	24	24	22	19	24	24	23	19	23	24	23	20	23	23	23	20	22	22	22	19	20	20	21	18
		kW	2.26	2.32	2.41	2.50	2.47	2.53	2.63	2.73	2.65	2.72	2.82	2.93	2.81	2.88	2.99	3.11	2.95	3.02	3.14	3.26	3.07	3.14	3.26	3.39
		Amps	8.5	8.7	9.0	9.3	9.2	9.4	9.6	10.0	9.9	10.1	10.4	10.8	10.5	10.8	11.1	11.5	11.1	11.4	11.8	12.2	11.8	12.0	12.4	12.9
		HI PR	135	146	154	160	152	163	173	180	173	186	196	205	197	212	224	233	221	238	251	262	244	263	278	290
		LO PR	64	68	75	79	68	72	79	84	70	75	82	87	74	79	86	92	78	83	90	96	80	85	93	99

IDB: Entering Indoor Dry Bulb Temperature
High and low pressures are measured at the liquid and suction service valves.
Shaded area reflects AHRI conditions
kW = Total system power
Amps = outdoor unit amps (comp.+fan)
Design Subcooling 9 ±3 °F @ the liquid service valve, ARI 95 test conditions

			Outdoor Ambient Temperature																							
			65				75				85				95				105				115			
			Entering Indoor Wet Bulb Temperature																							
IDB	Airflow		59	63	67	71	59	63	67	71	59	63	67	71	59	63	67	71	59	63	67	71	59	63	67	71
70	1400	MBh	40.8	42.3	46.3	-	39.9	41.3	45.3	-	38.9	40.3	44.2	-	38.0	39.3	43.1	-	36.1	37.4	41.0	-	33.4	34.6	37.9	-
		S/T	0.68	0.57	0.40	-	0.71	0.59	0.41	-	0.73	0.61	0.42	-	0.75	0.63	0.43	-	0.78	0.65	0.45	-	0.78	0.66	0.45	-
		ΔT	18	16	12	-	19	16	12	-	19	16	12	-	19	16	12	-	18	16	12	-	17	15	11	-
		kW	2.46	2.52	2.62	-	2.69	2.75	2.86	-	2.88	2.96	3.07	-	3.06	3.14	3.26	-	3.21	3.29	3.41	-	3.34	3.42	3.55	-
		Amps	9.9	10.1	10.4	-	10.6	10.9	11.2	-	11.5	11.7	12.1	-	12.2	12.5	12.9	-	13.0	13.3	13.7	-	13.7	14.0	14.5	-
		HI PR	127	136	144	-	142	153	161	-	162	174	184	-	184	198	209	-	207	223	235	-	229	246	260	-
		LO PR	60	63	69	-	63	67	73	-	66	70	76	-	69	73	80	-	72	77	84	-	75	79	87	-
	1600	MBh	44.2	45.8	50.2	-	43.2	44.8	49.0	-	42.2	43.7	47.9	-	41.1	42.6	46.7	-	39.1	40.5	44.4	-	36.2	37.5	41.1	-
		S/T	0.71	0.59	0.41	-	0.73	0.61	0.43	-	0.75	0.63	0.44	-	0.78	0.65	0.45	-	0.81	0.67	0.47	-	0.81	0.68	0.47	-
		ΔT	18	16	12	-	18	16	12	-	18	16	12	-	18	16	12	-	18	16	12	-	17	15	11	-
		kW	2.53	2.60	2.69	-	2.76	2.83	2.94	-	2.97	3.04	3.16	-	3.15	3.23	3.35	-	3.30	3.39	3.52	-	3.44	3.52	3.66	-
		Amps	10.1	10.4	10.7	-	10.9	11.1	11.5	-	11.8	12.1	12.4	-	12.6	12.9	13.3	-	13.3	13.6	14.1	-	14.1	14.4	14.9	-
		HI PR	131	140	148	-	146	158	166	-	167	179	189	-	190	204	216	-	213	230	243	-	236	254	268	-
		LO PR	62	65	71	-	65	69	75	-	68	72	78	-	71	75	82	-	74	79	86	-	77	82	89	-
	1800	MBh	45.5	47.2	51.7	-	44.5	46.1	50.5	-	43.4	45.0	49.3	-	42.4	43.9	48.1	-	40.2	41.7	45.7	-	37.3	38.6	42.3	-
		S/T	0.74	0.62	0.43	-	0.77	0.64	0.45	-	0.79	0.66	0.46	-	0.82	0.68	0.47	-	0.85	0.71	0.49	-	0.85	0.71	0.49	-
		ΔT	17	15	11	-	17	15	11	-	18	15	12	-	18	15	12	-	17	15	11	-	16	14	11	-
		kW	2.56	2.62	2.72	-	2.79	2.86	2.97	-	3.00	3.07	3.19	-	3.18	3.26	3.38	-	3.34	3.42	3.55	-	3.47	3.56	3.69	-
		Amps	10.2	10.4	10.8	-	11.0	11.2	11.6	-	11.9	12.2	12.6	-	12.7	13.0	13.4	-	13.4	13.8	14.2	-	14.2	14.6	15.0	-
		HI PR	132	142	150	-	148	159	168	-	168	181	191	-	192	206	218	-	216	232	245	-	238	256	271	-
		LO PR	62	66	72	-	66	70	76	-	68	73	79	-	72	76	83	-	75	80	87	-	78	83	90	-
75	1400	MBh	41.5	42.7	46.2	49.6	40.5	41.7	45.2	48.5	39.6	40.7	44.1	47.3	38.6	**39.7**	43.0	46.2	36.7	37.8	40.9	43.9	34.0	35.0	37.9	40.6
		S/T	0.78	0.69	0.53	0.34	0.81	0.72	0.55	0.35	0.83	0.74	0.56	0.36	0.85	**0.76**	0.58	0.37	0.88	0.79	0.60	0.39	0.89	0.80	0.60	0.39
		ΔT	21	19	16	11	21	20	16	11	21	20	16	11	22	**20**	16	11	21	20	16	11	20	18	15	10
		kW	2.48	2.55	2.64	2.74	2.71	2.78	2.88	2.99	2.91	2.99	3.10	3.22	3.09	**3.17**	3.29	3.41	3.24	3.32	3.45	3.58	3.37	3.46	3.59	3.72
		Amps	10.0	10.2	10.5	10.9	10.7	11.0	11.3	11.7	11.6	11.8	12.2	12.7	12.3	**12.6**	13.0	13.5	13.1	13.4	13.8	14.3	13.8	14.2	14.6	15.2
		HI PR	128	138	145	152	144	154	163	170	163	176	185	193	186	**200**	211	220	209	225	238	248	231	249	263	274
		LO PR	60	64	70	75	64	68	74	79	66	70	77	82	70	**74**	81	86	73	78	85	90	75	80	88	93
	1600	MBh	45.0	46.3	50.1	53.8	43.9	45.2	48.9	52.5	42.9	44.1	47.8	51.3	41.8	**43.1**	46.6	50.0	39.7	40.9	44.3	47.5	36.8	37.9	41.0	44.0
		S/T	0.81	0.72	0.55	0.35	0.84	0.75	0.57	0.36	0.86	0.77	0.58	0.37	0.88	**0.79**	0.60	0.38	0.92	0.82	0.62	0.40	0.93	0.83	0.63	0.40
		ΔT	21	19	16	11	21	19	16	11	21	19	16	11	21	**20**	16	11	21	19	16	11	20	18	15	10
		kW	2.56	2.62	2.72	2.82	2.79	2.86	2.97	3.08	3.00	3.07	3.19	3.31	3.18	**3.26**	3.39	3.52	3.34	3.42	3.55	3.69	3.47	3.56	3.69	3.84
		Amps	10.2	10.4	10.8	11.1	11.0	11.2	11.6	12.0	11.9	12.2	12.6	13.0	12.7	**13.0**	13.4	13.9	13.4	13.8	14.2	14.7	14.2	14.6	15.0	15.6
		HI PR	132	142	150	156	148	159	168	175	168	181	191	199	192	**206**	218	227	216	232	245	256	238	256	271	282
		LO PR	62	66	72	77	66	70	76	81	68	73	79	84	72	**76**	83	89	75	80	87	93	78	83	90	96
	1800	MBh	46.3	47.7	51.6	55.4	45.2	46.6	50.4	54.1	44.2	45.5	49.2	52.8	43.1	**44.4**	48.0	51.5	40.9	42.1	45.6	48.9	37.9	39.0	42.2	45.3
		S/T	0.84	0.76	0.57	0.37	0.88	0.78	0.59	0.38	0.90	0.80	0.61	0.39	0.93	**0.83**	0.63	0.40	0.96	0.86	0.65	0.42	0.97	0.87	0.66	0.42
		ΔT	20	18	15	10	20	19	15	11	20	19	15	11	20	**19**	15	11	20	19	15	10	19	17	14	10
		kW	2.58	2.65	2.75	2.85	2.82	2.89	3.00	3.11	3.03	3.10	3.22	3.34	3.21	**3.29**	3.42	3.55	3.37	3.45	3.58	3.72	3.50	3.59	3.73	3.87
		Amps	10.3	10.5	10.9	11.2	11.1	11.3	11.7	12.1	12.0	12.3	12.7	13.1	12.8	**13.1**	13.5	14.0	13.6	13.9	14.3	14.9	14.3	14.7	15.2	15.7
		HI PR	133	143	151	158	149	161	170	177	170	183	193	201	194	**208**	220	229	218	234	247	258	241	259	273	285
		LO PR	63	67	73	78	66	71	77	82	69	73	80	85	72	**77**	84	90	76	81	88	94	78	83	91	97

IDB: Entering Indoor Dry Bulb Temperature
High and low pressures are measured at the liquid and suction service valves.
Shaded area reflects ACCA (TVA) conditions
kW = Total system power
Amps = outdoor unit amps (comp.+fan)
Design Subcooling 9 ±3 °F @ the liquid service valve, ARI 95 test conditions

Expanded Cooling Data — GSC130481C* (cont.)

			Outdoor Ambient Temperature																							
			65				75				85				95				105				115			
			Entering Indoor Wet Bulb Temperature																							
IDB	Airflow		59	63	67	71	59	63	67	71	59	63	67	71	59	63	67	71	59	63	67	71	59	63	67	71
80	1400	MBh	42.2	43.2	46.1	49.3	41.3	42.2	45.0	48.1	40.3	41.2	44.0	47.0	39.3	40.1	42.9	45.9	37.3	38.1	40.7	43.6	34.6	35.3	37.7	40.3
		S/T	0.85	0.80	0.65	0.5	0.88	0.83	0.67	0.50	0.91	0.85	0.69	0.5	0.93	0.88	0.71	0.53	0.97	0.91	0.74	0.6	0.98	0.92	0.75	0.56
		ΔT	24	23	20	16	24	23	20	16	24	23	20	16	24	23	20	16	24	23	20	16	22	21	19	15
		kW	2.51	2.57	2.67	2.8	2.74	2.81	2.91	3.02	2.94	3.02	3.13	3.2	3.12	3.20	3.32	3.45	3.27	3.35	3.48	3.6	3.40	3.49	3.62	3.76
		Amps	10.0	10.3	10.6	10.9	10.8	11.0	11.4	11.8	11.7	12.0	12.3	12.8	12.4	12.7	13.1	13.6	13.2	13.5	14.0	14.5	14.0	14.3	14.8	15.3
		HI PR	129	139	147	153.1	145	156	165	172	165	177	187	195.4	188	202	213	223	211	227	240	250.4	233	251	265	277
		LO PR	61	65	71	75.3	64	68	75	80	67	71	78	82.7	70	75	82	87	74	78	85	91.0	76	81	88	94
	1600	MBh	45.8	46.8	50.0	53.4	44.7	45.7	48.8	52.2	43.6	44.6	47.6	50.9	42.6	43.5	**46.5**	49.7	40.4	41.3	44.1	47.2	37.5	38.3	40.9	43.7
		S/T	0.88	0.83	0.67	0.5	0.92	0.86	0.70	0.52	0.94	0.88	0.72	0.5	0.97	0.91	**0.74**	0.55	1.00	0.94	0.77	0.6	1.00	0.95	0.77	0.58
		ΔT	23	22	19	15	24	23	20	16	24	23	20	16	24	23	**20**	16	23	22	19	16	22	21	18	15
		kW	2.58	2.65	2.75	2.9	2.82	2.89	3.00	3.11	3.03	3.10	3.22	3.3	3.21	3.29	**3.42**	3.55	3.37	3.45	3.59	3.7	3.50	3.59	3.73	3.87
		Amps	10.3	10.5	10.9	11.2	11.1	11.3	11.7	12.1	12.0	12.3	12.7	13.1	12.8	13.1	**13.5**	14.0	13.6	13.9	14.3	14.9	14.3	14.7	15.2	15.7
		HI PR	133	143	151	157.9	149	161	170	177	170	183	193	201.5	194	208	**220**	229	218	234	248	258.1	241	259	273	285
		LO PR	63	67	73	77.7	66	71	77	82	69	73	80	85.3	72	77	**84**	90	76	81	88	93.9	78	84	91	97
	1800	MBh	47.1	48.2	51.5	55.0	46.0	47.0	50.3	53.7	44.9	45.9	49.1	52.4	43.8	44.8	47.9	51.2	41.7	42.6	45.5	48.6	38.6	39.4	42.1	45.0
		S/T	0.93	0.87	0.71	0.5	0.96	0.90	0.73	0.55	1.00	0.92	0.75	0.6	1.00	0.95	0.78	0.58	1.00	1.00	0.81	0.6	1.00	1.00	0.81	0.61
		ΔT	22	21	19	15	23	22	19	15	23	22	19	15	22	22	19	15	21	22	19	15	20	20	17	14
		kW	2.61	2.67	2.77	2.9	2.85	2.92	3.03	3.14	3.06	3.13	3.25	3.4	3.24	3.32	3.45	3.58	3.40	3.49	3.62	3.8	3.54	3.63	3.77	3.91
		Amps	10.4	10.6	11.0	11.3	11.2	11.4	11.8	12.2	12.1	12.4	12.8	13.2	12.9	13.2	13.6	14.1	13.7	14.0	14.5	15.0	14.5	14.8	15.3	15.9
		HI PR	135	145	153	159.4	151	162	172	179	172	185	195	203.5	196	210	222	232	220	237	250	260.7	243	262	276	288
		LO PR	63	67	74	78.4	67	71	78	83	70	74	81	86.1	73	78	85	90	77	82	89	94.8	79	84	92	98
85	1400	MBh	43.0	43.8	45.9	48.9	42.0	42.8	44.8	47.8	41.0	41.8	43.7	46.7	40.0	40.7	42.7	45.5	38.0	38.7	40.5	43.3	35.2	35.9	37.6	40.1
		S/T	0.89	0.86	0.78	0.63	0.93	0.89	0.81	0.65	0.95	0.92	0.83	0.67	0.98	0.95	0.85	0.69	1.00	0.98	0.89	0.72	1.00	0.99	0.89	0.72
		ΔT	25	25	23	20	26	25	24	21	26	25	24	21	26	25	24	21	25	25	24	20	23	23	22	19
		kW	2.53	2.60	2.69	2.80	2.76	2.83	2.94	3.05	2.97	3.04	3.16	3.28	3.15	3.23	3.35	3.48	3.30	3.39	3.52	3.65	3.44	3.52	3.66	3.80
		Amps	10.1	10.4	10.7	11.0	10.9	11.1	11.5	11.9	11.8	12.1	12.4	12.9	12.6	12.8	13.3	13.7	13.3	13.6	14.1	14.6	14.1	14.4	14.9	15.4
		HI PR	130	140	148	155	146	158	166	174	167	179	189	197	190	204	216	225	213	230	242	253	236	254	268	279
		LO PR	62	65	71	76	65	69	75	80	68	72	78	84	71	75	82	88	74	79	86	92	77	82	89	95
	1600	MBh	46.6	47.5	49.7	53.0	45.5	46.4	48.5	51.8	44.4	45.3	47.4	50.6	43.3	44.1	46.2	49.3	41.1	41.9	43.9	46.9	38.1	38.9	40.7	43.4
		S/T	0.93	0.89	0.81	0.65	0.96	0.93	0.84	0.68	0.98	0.95	0.86	0.70	1.00	0.98	0.89	0.72	1.00	1.00	0.92	0.75	1.00	1.00	0.93	0.75
		ΔT	25	24	23	20	25	25	23	20	25	25	23	20	25	25	24	20	24	24	23	20	22	22	22	19
		kW	2.61	2.67	2.77	2.88	2.85	2.92	3.03	3.14	3.06	3.13	3.25	3.38	3.24	3.32	3.45	3.58	3.40	3.49	3.62	3.76	3.54	3.63	3.77	3.91
		Amps	10.4	10.6	11.0	11.3	11.2	11.4	11.8	12.2	12.1	12.4	12.8	13.2	12.9	13.2	13.6	14.1	13.7	14.0	14.5	15.0	14.5	14.8	15.3	15.9
		HI PR	135	145	153	159	151	162	172	179	172	185	195	203	196	210	222	232	220	237	250	261	243	262	276	288
		LO PR	63	67	74	78	67	71	78	83	70	74	81	86	73	78	85	90	77	82	89	95	79	84	92	98
	1800	MBh	48.0	48.9	51.2	54.6	46.8	47.7	50.0	53.3	45.7	46.6	48.8	52.1	44.6	45.5	47.6	50.8	42.4	43.2	45.2	48.3	39.3	40.0	41.9	44.7
		S/T	0.97	0.94	0.85	0.69	1.00	0.97	0.88	0.71	1.00	1.00	0.90	0.73	1.00	1.00	0.93	0.75	1.00	1.00	0.96	0.78	1.00	1.00	0.97	0.79
		ΔT	24	23	22	19	24	24	22	19	23	24	22	19	23	23	23	20	22	22	22	19	20	20	21	18
		kW	2.63	2.70	2.80	2.90	2.87	2.95	3.06	3.17	3.09	3.16	3.28	3.41	3.27	3.36	3.48	3.62	3.43	3.52	3.65	3.80	3.57	3.66	3.80	3.95
		Amps	10.5	10.7	11.0	11.4	11.3	11.5	11.9	12.3	12.2	12.5	12.9	13.4	13.0	13.3	13.7	14.2	13.8	14.1	14.6	15.1	14.6	14.9	15.4	16.0
		HI PR	136	146	154	161	152	164	173	181	173	187	197	206	197	213	224	234	222	239	252	263	245	264	279	291
		LO PR	64	68	74	79	68	72	79	84	70	75	82	87	74	79	86	91	77	82	90	96	80	85	93	99

IDB: Entering Indoor Dry Bulb Temperature
High and low pressures are measured at the liquid and suction service valves.
Shaded area reflects AHRI conditions
kW = Total system power
Amps = outdoor unit amps (comp.+fan)
Design Subcooling 9 ±3 °F @ the liquid service valve, ARI 95 test conditions

			Outdoor Ambient Temperature																							
			65				75				85				95				105				115			
			Entering Indoor Wet Bulb Temperature																							
IDB	Airflow		59	63	67	71	59	63	67	71	59	63	67	71	59	63	67	71	59	63	67	71	59	63	67	71
70	1400	MBh	48.1	49.9	54.7	-	47.0	48.7	53.4	-	45.9	47.6	52.1	-	44.8	46.4	50.9	-	42.5	44.1	48.3	-	39.4	40.8	44.8	-
		S/T	0.66	0.55	0.38	-	0.68	0.57	0.39	-	0.70	0.58	0.40	-	0.72	0.60	0.42	-	0.75	0.62	0.43	-	0.75	0.63	0.44	-
		ΔT	21	18	14	-	21	18	14	-	21	18	14	-	21	18	14	-	21	18	14	-	20	17	13	-
		kW	2.92	2.99	3.11	-	3.19	3.27	3.40	-	3.43	3.52	3.65	-	3.64	3.73	3.87	-	3.82	3.91	4.06	-	3.97	4.07	4.23	-
		Amps	11.5	11.7	12.1	-	12.4	12.6	13.1	-	13.4	13.7	14.1	-	14.3	14.6	15.1	-	15.2	15.5	16.0	-	16.1	16.4	17.0	-
		HI PR	126	136	143	-	141	152	161	-	161	173	183	-	183	197	208	-	206	222	234	-	228	245	259	-
		LO PR	56	60	66	-	60	63	69	-	62	66	72	-	65	69	76	-	68	73	79	-	71	75	82	-
	1600	MBh	52.2	54.1	59.2	-	50.9	52.8	57.9	-	49.7	51.5	56.5	-	48.5	50.3	55.1	-	46.1	47.8	52.3	-	42.7	44.3	48.5	-
		S/T	0.68	0.57	0.39	-	0.71	0.59	0.41	-	0.72	0.60	0.42	-	0.75	0.62	0.43	-	0.78	0.65	0.45	-	0.78	0.65	0.45	-
		ΔT	20	18	13	-	21	18	14	-	21	18	14	-	21	18	14	-	21	18	13	-	19	17	13	-
		kW	3.01	3.08	3.20	-	3.28	3.37	3.50	-	3.53	3.62	3.76	-	3.75	3.84	3.99	-	3.93	4.03	4.18	-	4.09	4.19	4.35	-
		Amps	11.8	12.0	12.4	-	12.7	13.0	13.4	-	13.8	14.1	14.5	-	14.7	15.0	15.5	-	15.6	16.0	16.5	-	16.5	16.9	17.5	-
		HI PR	130	140	148	-	146	157	166	-	166	178	188	-	189	203	215	-	212	229	241	-	235	253	267	-
		LO PR	58	62	68	-	61	65	71	-	64	68	74	-	67	71	78	-	70	75	82	-	73	77	84	-
	1800	MBh	53.7	55.7	61.0	-	52.5	54.4	59.6	-	51.2	53.1	58.2	-	50.0	51.8	56.8	-	47.5	49.2	53.9	-	44.0	45.6	49.9	-
		S/T	0.71	0.60	0.41	-	0.74	0.62	0.43	-	0.76	0.63	0.44	-	0.78	0.65	0.45	-	0.81	0.68	0.47	-	0.82	0.68	0.47	-
		ΔT	20	17	13	-	20	17	13	-	20	17	13	-	20	17	13	-	20	17	13	-	18	16	12	-
		kW	3.04	3.11	3.23	-	3.32	3.40	3.53	-	3.56	3.65	3.79	-	3.78	3.88	4.03	-	3.97	4.07	4.23	-	4.13	4.23	4.40	-
		Amps	11.9	12.2	12.5	-	12.8	13.1	13.5	-	13.9	14.2	14.7	-	14.8	15.2	15.7	-	15.7	16.1	16.6	-	16.7	17.1	17.6	-
		HI PR	131	141	149	-	147	158	167	-	167	180	190	-	191	205	217	-	215	231	244	-	237	255	269	-
		LO PR	59	62	68	-	62	66	72	-	64	69	75	-	68	72	79	-	71	76	82	-	73	78	85	-
75	1400	MBh	49.0	50.4	54.6	58.6	47.8	49.2	53.3	57.2	46.7	48.1	52.0	55.8	45.5	**46.9**	50.8	54.5	43.3	44.5	48.2	51.7	40.1	41.3	44.7	47.9
		S/T	0.75	0.67	0.51	0.33	0.77	0.69	0.52	0.34	0.79	0.71	0.54	0.35	0.82	**0.73**	0.55	0.36	0.85	0.76	0.58	0.37	0.86	0.77	0.58	0.37
		ΔT	24	22	18	13	24	22	18	13	24	22	18	13	24	**23**	18	13	24	22	18	13	23	21	17	12
		kW	2.95	3.02	3.14	3.26	3.22	3.30	3.43	3.56	3.46	3.55	3.68	3.83	3.67	**3.77**	3.91	4.06	3.85	3.95	4.10	4.26	4.01	4.11	4.27	4.43
		Amps	11.6	11.8	12.2	12.6	12.5	12.8	13.2	13.6	13.5	13.8	14.3	14.8	14.4	**14.8**	15.2	15.8	15.3	15.7	16.2	16.8	16.2	16.6	17.1	17.8
		HI PR	127	137	145	151	143	154	162	169	162	175	185	193	185	**199**	210	219	208	224	237	247	230	248	261	273
		LO PR	57	61	66	70	60	64	70	74	63	67	73	77	66	**70**	76	81	69	73	80	85	71	76	83	88
	1600	MBh	53.0	54.6	59.1	63.4	51.8	53.3	57.7	62.0	50.6	52.1	56.4	60.5	49.3	**50.8**	55.0	59.0	46.9	48.3	52.2	56.1	43.4	44.7	48.4	51.9
		S/T	0.77	0.69	0.52	0.34	0.80	0.72	0.54	0.35	0.82	0.74	0.56	0.36	0.85	**0.76**	0.57	0.37	0.88	0.79	0.60	0.38	0.89	0.80	0.60	0.39
		ΔT	24	22	18	12	24	22	18	12	24	22	18	12	24	**22**	18	13	24	22	18	12	22	20	17	12
		kW	3.04	3.11	3.23	3.35	3.32	3.40	3.53	3.67	3.56	3.66	3.79	3.94	3.78	**3.88**	4.03	4.18	3.97	4.07	4.23	4.39	4.13	4.24	4.40	4.57
		Amps	11.9	12.2	12.5	13.0	12.8	13.1	13.5	14.0	13.9	14.2	14.7	15.2	14.8	**15.2**	15.7	16.2	15.7	16.1	16.6	17.3	16.7	17.1	17.6	18.3
		HI PR	131	141	149	156	147	159	167	175	168	180	190	199	191	**205**	217	226	215	231	244	254	237	255	269	281
		LO PR	59	63	68	73	62	66	72	77	65	69	75	80	68	**72**	79	84	71	76	82	88	73	78	85	91
	1800	MBh	54.6	56.2	60.9	65.3	53.4	54.9	59.5	63.8	52.1	53.6	58.1	62.3	50.8	**52.3**	56.6	60.8	48.3	49.7	53.8	57.7	44.7	46.0	49.8	53.5
		S/T	0.81	0.73	0.55	0.35	0.84	0.75	0.57	0.37	0.86	0.77	0.58	0.38	0.89	**0.80**	0.60	0.39	0.92	0.83	0.63	0.40	0.93	0.83	0.63	0.41
		ΔT	23	21	17	12	23	21	17	12	23	21	17	12	23	**21**	17	12	23	21	17	12	21	20	16	11
		kW	3.06	3.14	3.26	3.39	3.35	3.43	3.56	3.70	3.60	3.69	3.83	3.98	3.82	**3.92**	4.07	4.22	4.01	4.11	4.27	4.43	4.17	4.28	4.44	4.61
		Amps	12.0	12.3	12.6	13.1	12.9	13.2	13.6	14.1	14.0	14.3	14.8	15.3	14.9	**15.3**	15.8	16.4	15.9	16.3	16.8	17.4	16.8	17.2	17.8	18.4
		HI PR	133	143	151	157	149	160	169	176	169	182	192	201	193	**207**	219	228	217	233	246	257	240	258	272	284
		LO PR	59	63	69	73	63	67	73	78	65	69	76	81	68	**73**	79	85	72	76	83	89	74	79	86	92

IDB: Entering Indoor Dry Bulb Temperature
High and low pressures are measured at the liquid and suction service valves.
Shaded area reflects ACCA (TVA) conditions
kW = Total system power
Amps = outdoor unit amps (comp.+fan)
Design Subcooling 9 ±3 °F @ the liquid service valve, ARI 95 test conditions

			OUTDOOR AMBIENT TEMPERATURE																							
			65				75				85				95				105				115			
			ENTERING INDOOR WET BULB TEMPERATURE																							
IDB	AIRFLOW		59	63	67	71	59	63	67	71	59	63	67	71	59	63	67	71	59	63	67	71	59	63	67	71
80	1400	MBh	49.8	50.9	54.4	58.2	48.7	49.7	53.1	56.8	47.5	48.5	51.9	55.4	46.4	47.4	50.6	54.1	44.0	45.0	48.1	51.4	40.8	41.7	44.5	47.6
		S/T	0.82	0.77	0.62	0.5	0.85	0.80	0.65	0.48	0.87	0.82	0.66	0.5	0.90	0.84	0.69	0.51	0.93	0.87	0.71	0.5	0.94	0.88	0.72	0.54
		ΔT	27	26	22	18	27	26	23	18	27	26	23	18	27	26	23	18	27	26	22	18	25	24	21	17
		kW	2.98	3.05	3.17	3.3	3.25	3.34	3.46	3.59	3.50	3.58	3.72	3.9	3.71	3.80	3.95	4.10	3.89	3.99	4.14	4.3	4.05	4.15	4.31	4.48
		Amps	11.7	11.9	12.3	12.8	12.6	12.9	13.3	13.8	13.6	14.0	14.4	14.9	14.5	14.9	15.4	15.9	15.5	15.8	16.3	16.9	16.3	16.7	17.3	17.9
		HI PR	129	138	146	152.4	144	155	164	171	164	177	187	194.5	187	201	212	222	210	226	239	249.3	232	250	264	275
		LO PR	58	61	67	71.2	61	65	71	75	63	67	73	78.2	66	71	77	82	70	74	81	86.1	72	77	84	89
	1600	MBh	54.0	55.2	58.9	63.0	52.7	53.9	57.6	61.5	51.5	52.6	56.2	60.1	50.2	51.3	**54.8**	58.6	47.7	48.7	52.1	55.7	44.2	45.2	48.2	51.6
		S/T	0.85	0.80	0.65	0.5	0.88	0.83	0.67	0.50	0.90	0.85	0.69	0.5	0.93	0.87	**0.71**	0.53	0.97	0.91	0.74	0.6	0.97	0.91	0.74	0.56
		ΔT	26	25	22	18	27	26	22	18	27	26	22	18	27	26	**22**	18	27	25	22	18	25	24	21	16
		kW	3.07	3.14	3.26	3.4	3.35	3.43	3.56	3.70	3.60	3.69	3.83	4.0	3.82	3.92	**4.07**	4.22	4.01	4.11	4.27	4.4	4.17	4.28	4.44	4.61
		Amps	12.0	12.3	12.7	13.1	12.9	13.2	13.6	14.1	14.0	14.3	14.8	15.3	14.9	15.3	**15.8**	16.4	15.9	16.3	16.8	17.4	16.8	17.2	17.8	18.4
		HI PR	133	143	151	157.2	149	160	169	176	169	182	192	200.6	193	207	**219**	228	217	233	246	257.0	240	258	272	284
		LO PR	59	63	69	73.4	63	67	73	78	65	69	76	80.6	68	73	**80**	85	72	76	83	88.7	74	79	86	92
	1800	MBh	55.6	56.8	60.7	64.9	54.3	55.5	59.3	63.4	53.0	54.2	57.9	61.9	51.7	52.9	56.5	60.4	49.1	50.2	53.6	57.3	45.5	46.5	49.7	53.1
		S/T	0.89	0.84	0.68	0.5	0.92	0.87	0.70	0.53	0.95	0.89	0.72	0.5	1.00	0.92	0.75	0.56	1.00	0.95	0.77	0.6	1.00	0.96	0.78	0.58
		ΔT	25	24	21	17	26	25	21	17	26	25	21	17	26	25	22	17	25	24	21	17	23	23	20	16
		kW	3.09	3.17	3.29	3.4	3.38	3.47	3.60	3.74	3.63	3.73	3.87	4.0	3.86	3.96	4.11	4.26	4.05	4.15	4.31	4.5	4.21	4.32	4.48	4.66
		Amps	12.1	12.4	12.8	13.2	13.0	13.3	13.8	14.3	14.1	14.5	14.9	15.5	15.1	15.4	15.9	16.5	16.0	16.4	16.9	17.6	17.0	17.4	17.9	18.6
		HI PR	134	144	152	158.7	150	162	171	178	171	184	194	202.6	195	209	221	231	219	236	249	259.5	242	260	275	287
		LO PR	60	64	70	74.1	63	67	74	78	66	70	76	81.4	69	74	80	86	72	77	84	89.6	75	80	87	93
85	1400	MBh	50.7	51.7	54.1	57.7	49.5	50.5	52.9	56.4	48.3	49.3	51.6	55.1	47.2	48.1	50.3	53.7	44.8	45.7	47.8	51.0	41.5	42.3	44.3	47.3
		S/T	0.86	0.83	0.75	0.61	0.89	0.86	0.77	0.63	0.91	0.88	0.79	0.64	0.94	0.91	0.82	0.67	0.98	0.94	0.85	0.69	0.99	0.95	0.86	0.70
		ΔT	29	28	27	23	29	28	27	23	29	28	27	23	29	29	27	23	29	28	27	23	27	26	25	22
		kW	3.01	3.08	3.20	3.32	3.28	3.37	3.49	3.63	3.53	3.62	3.76	3.90	3.74	3.84	3.99	4.14	3.93	4.03	4.18	4.35	4.09	4.19	4.35	4.52
		Amps	11.8	12.0	12.4	12.9	12.7	13.0	13.4	13.9	13.8	14.1	14.5	15.1	14.7	15.0	15.5	16.1	15.6	16.0	16.5	17.1	16.5	16.9	17.5	18.1
		HI PR	130	140	148	154	146	157	166	173	166	178	188	196	189	203	215	224	212	229	241	252	235	253	267	278
		LO PR	58	62	68	72	61	65	71	76	64	68	74	79	67	71	78	83	70	75	82	87	73	77	84	90
	1600	MBh	54.9	56.0	58.6	62.6	53.6	54.7	57.3	61.1	52.4	53.4	55.9	59.7	51.1	52.1	54.5	58.2	48.5	49.5	51.8	55.3	45.0	45.8	48.0	51.2
		S/T	0.89	0.86	0.78	0.63	0.92	0.89	0.80	0.65	0.95	0.91	0.82	0.67	0.98	0.94	0.85	0.69	1.00	0.98	0.88	0.72	1.00	0.99	0.89	0.72
		ΔT	28	28	26	23	28	28	26	23	28	28	26	23	29	28	27	23	28	28	26	23	26	26	25	21
		kW	3.09	3.17	3.29	3.42	3.38	3.47	3.60	3.74	3.63	3.73	3.87	4.02	3.86	3.96	4.11	4.26	4.05	4.15	4.31	4.48	4.21	4.32	4.48	4.66
		Amps	12.1	12.4	12.8	13.2	13.0	13.3	13.8	14.3	14.1	14.5	14.9	15.5	15.1	15.4	15.9	16.5	16.0	16.4	16.9	17.6	17.0	17.4	17.9	18.6
		HI PR	134	144	152	159	150	162	171	178	171	184	194	203	195	209	221	231	219	236	249	260	242	260	275	287
		LO PR	60	64	70	74	63	67	74	78	66	70	76	81	69	74	80	86	72	77	84	90	75	80	87	93
	1800	MBh	56.6	57.7	60.4	64.4	55.3	56.3	59.0	62.9	53.9	55.0	57.6	61.4	52.6	53.6	56.2	59.9	50.0	51.0	53.4	56.9	46.3	47.2	49.4	52.7
		S/T	0.93	0.90	0.81	0.66	0.97	0.93	0.84	0.68	0.99	0.96	0.86	0.70	1.00	0.99	0.89	0.72	1.00	1.00	0.93	0.75	1.00	1.00	0.93	0.76
		ΔT	27	27	25	22	27	27	25	22	27	27	25	22	27	27	26	22	26	26	25	22	24	24	24	20
		kW	3.12	3.20	3.32	3.45	3.41	3.50	3.63	3.77	3.67	3.76	3.91	4.06	3.89	3.99	4.15	4.31	4.08	4.19	4.35	4.52	4.25	4.36	4.53	4.70
		Amps	12.2	12.5	12.9	13.3	13.2	13.5	13.9	14.4	14.3	14.6	15.1	15.6	15.2	15.6	16.1	16.7	16.2	16.6	17.1	17.7	17.1	17.5	18.1	18.8
		HI PR	135	146	154	160	152	163	172	180	173	186	196	205	197	212	223	233	221	238	251	262	244	263	278	290
		LO PR	61	64	70	75	64	68	74	79	66	71	77	82	70	74	81	86	73	78	85	91	76	81	88	94

IDB: Entering Indoor Dry Bulb Temperature
High and low pressures are measured at the liquid and suction service valves.

Shaded area reflects AHRI conditions
kW = Total system power

Amps = outdoor unit amps (comp.+fan)
Design Subcooling 9 ±3 °F @ the liquid service valve, ARI 95 test conditions

Outdoor Unit	Indoor Units	Cooling Ratings				CFM	AHRI #
	Coils/Air Handlers	Total[1]	Sens.[1]	SEER[2]	EER[3]		
GSC130181F*	CA*F1824*6B*+EEP	18,000	13,600	13	11	600	4700185
GSC130181G*	CA*F1824*6B*+EEP	18,000	13,100	13	11	600	5897360
GSC130241F*	CA*F1824*6B*+EEP	22,800	17,600	13	11	800	4700186
GSC130301(D,E)*	CA*F3030*6B*+EEP	27,600	21,000	13	11	950	4705227
GSC130361G*	CA*F3642*6C*+EEP	33,400	24,200	13	11	1,200	5528471
GSC130421C*	CA*F4860*6B*+EEP	39,500	28,200	13	11	1,400	5528472
GSC130481C*	CA*F4961*6A*+EEP	44,500	33,800	13	11	1,600	5528473
GSC130601D*	CA*F4961*6A*+EEP	53,000	38,000	13	11	1,600	5528476

[1] BTU/h

[2] Seasonal Energy Efficiency Ratio; tested and rated per AHRI 210/240

[3] Energy Efficiency Ratio @ 80 °F/67 °F Inside - 95 °F

Notes

- Always check the S&R plate for electrical data on the unit being installed.
- When matching the outdoor unit to the indoor unit, use the piston supplied with the outdoor unit or that specified on the piston kit chart supplied with the indoor unit.
- EEP: Order from Service Dept. Part No. B13707-38 or new Solid State Board B13707-35S. Part No. B13707-38 is not interchangeable with B13707-35S. The Goodman Gas Furnace contains the EEP cooling time delay.

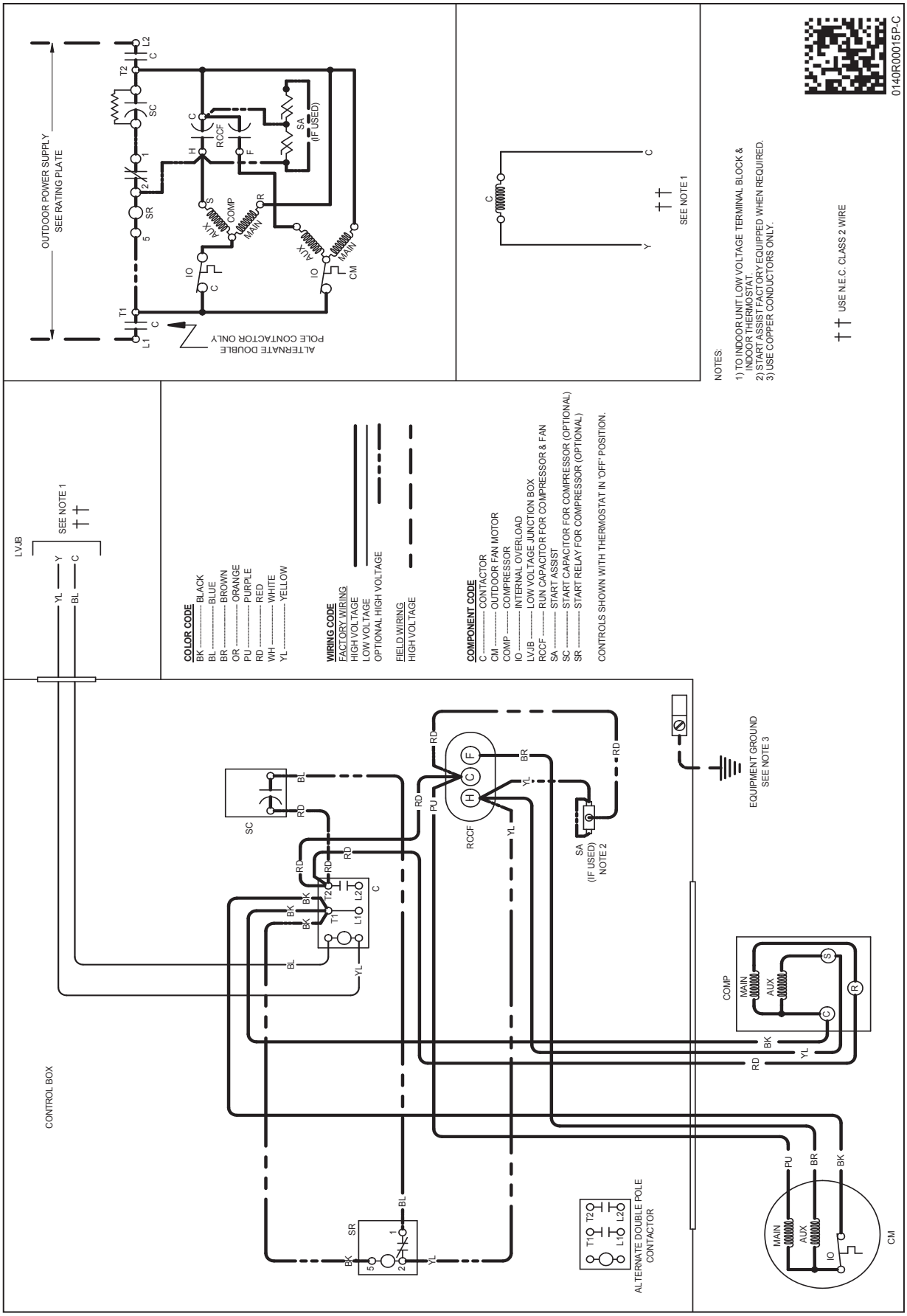

WARNING **High Voltage:** Disconnect all power before servicing or installing this unit. Multiple power sources may be present. Failure to do so may cause property damage, personal injury, or death.

Wiring is subject to change. Always refer to the wiring diagram or the unit for the most up-to-date wiring.

Dimensions

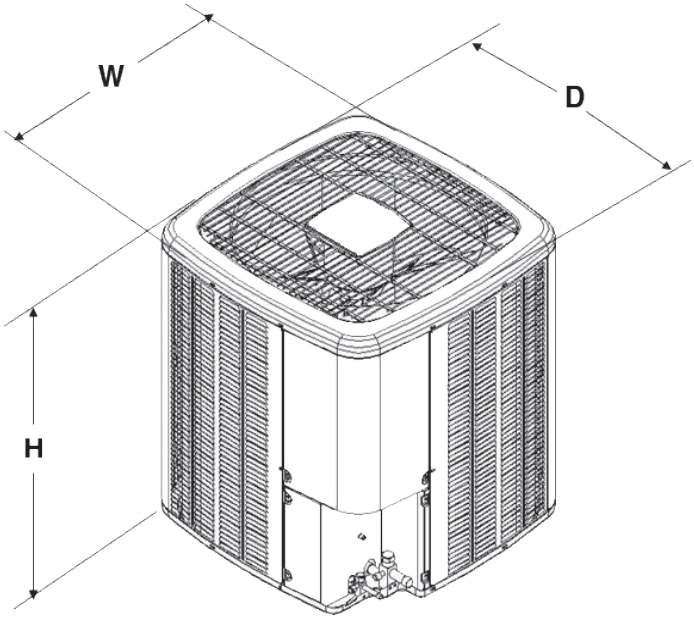

Model	Dimensions		
	W"	D"	H"
GSC130181G*	26	26	27½
GSC130241F*	23½	23½	25¾
GSC130301E*	26	26	30¼
GSC130361G*	29	29	30¼
GSC130421BC*	29	29	30¼
GSC130481C*	29	29	36¼
GSC130601D*	29	29	40

Accessories

Model	Description	GSC13 018**	GSC13 024**	GSC13 030**	GSC13 036**	GSC13 042**	GSC13 048**	GSC13 060**
ABK-20	Anchor Bracket Kit ▼			X	X	X	X	X
ABK-21	Anchor Bracket Kit ▼	X	X					
ASC-01	Anti-Short Cycle Kit	X	X	X	X	X	X	X
CSR-U-1	Hard-start Kit	X	X	X	X	X	X	X
CSR-U-2	Hard-start Kit			X				
CSR-U-3	Hard-start Kit							
FSK01A	Freeze Protection Kit [1]	X	X	X	X	X	X	X
LSK01A	Liquid Line Solenoid Kit [2]	X	X	X	X	X	X	X
0263M00019	Crankcase Heater	X						
OT18-60A	Outdoor Thermostat	X	X	X	X	X	X	X

▼ Contains 20 brackets; four brackets needed to anchor unit to pad

[1] Installed on indoor coil

[2] Field-installed, non-bleed, expansion valve kit — Condensing units and heat pumps with reciprocating compressors require the use of start-assist components when used in conjunction with an indoor coil using a non-bleed thermal expansion valve refrigerant metering device or liquid line solenoid kit.

Goodman Manufacturing Company, L.P., reserves the right to discontinue, or change at any time, specifications or designs without notice or without incurring obligations. © 2015 Goodman Manufacturing Company, L.P. • Houston, Texas • Printed in the USA.